Register Online!
(see page 2)

Slim Drop-In Heated Wells
HWBI-S Series

Installation and Operating Manual

P/N 07.04.563.00

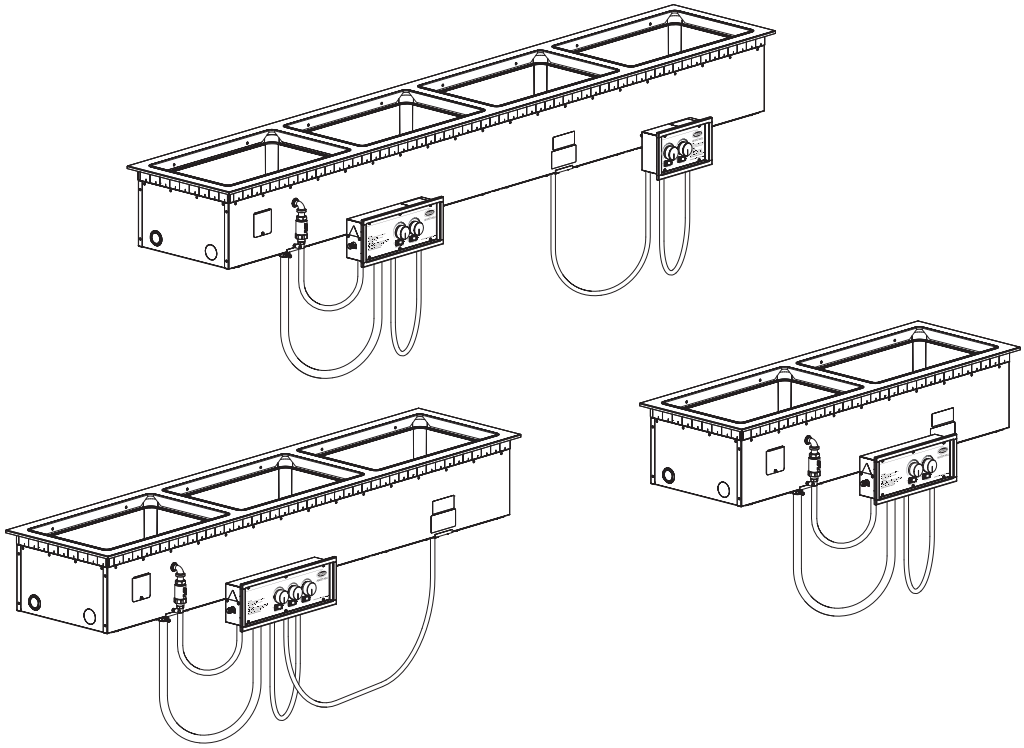

⚠ WARNING

Do not operate this equipment unless you have read and understood the contents of this manual! Failure to follow the instructions contained in this manual may result in serious injury or death. This manual contains important safety information concerning the maintenance, use, and operation of this product. If you're unable to understand the contents of this manual, please bring it to the attention of your supervisor. Keep this manual in a safe location for future reference.

⚠ ADVERTENCIA

No opere este equipo al menos que haya leído y comprendido el contenido de este manual! Cualquier falla en el seguimiento de las instrucciones contenidas en este manual puede resultar en un serio lesión o muerte. Este manual contiene importante información sobre seguridad concerniente al mantenimiento, uso y operación de este producto. Si usted no puede entender el contenido de este manual por favor pregunte a su supervisor. Almacenar este manual en una localización segura para la referencia futura.

⚠ AVERTISSEMENT

Ne pas utiliser cet équipement sans avoir lu et compris le contenu de ce manuel ! Le non-respect des instructions contenues dans ce manuel peut entraîner de graves blessures ou la mort. Ce manuel contient des informations importantes concernant l'entretien, l'utilisation et le fonctionnement de ce produit. Si vous ne comprenez pas le contenu de ce manuel, veuillez le signaler à votre supérieur. Conservez ce manuel dans un endroit sûr pour pouvoir vous y référer plus tard.

© 2011 Hatco Corporation

CONTENTS

Important Owner Information **2**
Introduction **2**
Important Safety Information **3**
Model Description **4**
Model Designation **5**
Specifications **5**
Dimensions 5
Electrical Rating Chart 6
Water Supply Specifications 6
Installation **7**
General 7
Countertop Cutout Dimensions 8
Installing a Remote Control Enclosure 9
Control Enclosure Cutout Dimensions 9
Connecting a Drain Line 10
Installing an Auto-Fill Unit 10
Operation **11**
General 11
Maintenance **12**
General 12
Daily Cleaning 12
Weekly Cleaning 12
Troubleshooting Guide **13**
Options and Accessories **13**
Converting a Unit to 3-Phase 15
Hatco Limited Warranty **15**
Authorized Parts Distributors ..... **Back Cover**

IMPORTANT OWNER INFORMATION

Record the model number, serial number (specification labels located on the side of the unit and the bottom of the control enclosure), voltage, and purchase date of the unit in the spaces below. Please have this information available when calling Hatco for service assistance.

Model No. _____

Serial No. _____

Voltage _____

Date of Purchase _____

Register your unit!
Completing online warranty registration will prevent delay in obtaining warranty coverage. Access the Hatco website at **www.hatcocorp.com**, select the *Parts & Service* pull-down menu, and click on "Warranty Registration".

Business Hours: 8:00 AM to 5:00 PM Central Standard Time (C.S.T.)

(Summer Hours: June to September – 8:00 AM to 5:00 PM C.S.T. Monday through Thursday 8:00 AM to 2:30 PM C.S.T. Friday)

Telephone: (800) 558-0607; (414) 671-6350

E-mail: partsandservice@hatcocorp.com

Fax: (800) 690-2966 (Parts and Service)
(414) 671-3976 (International)

24/7 — 24 Hour 7 Day Parts and Service Assistance available in the United States and Canada by calling (800) 558-0607.

Additional information can be found by visiting our web site at **www.hatcocorp.com**.

INTRODUCTION

Hatco Slim Drop-In Heated Wells are specially designed to hold heated foods at safe serving temperatures while providing easy, reachable access to all items in the well. Designed for dry or wet applications, the wells are available in several pan combinations—each heated with a long-life heating element that is covered by a 2 year part warranty. The metal-sheathed heating element is controlled by a remote thermostat. Heat is distributed evenly throughout the heavy gauge stainless steel construction to ensure hot food. The design allows for easy maintenance and durable performance. Standard units are UL approved and equipped with a remote control enclosure.

Units are equipped with EZ lock mounting hardware for quick and easy installation. Controls include individual lighted power switches and thermostat controls that retain temperature settings. One year parts and on-site labor warranty is standard.

Hatco Slim Drop-In Heated Wells are a product of extensive research and field testing. The materials used were selected for maximum durability, attractive appearance, and optimum performance. Every unit is inspected and tested thoroughly prior to shipment.

This manual provides the installation, safety, and operating instructions for Slim Drop-In Heated Wells. Hatco recommends all installation, operating, and safety instructions appearing in this manual be read prior to installation or operation of the Slim Drop-In Heated Wells.

Safety information that appears in this manual is identified by the following signal word panels:

⚠ WARNING

WARNING indicates a hazardous situation which, if not avoided, could result in death or serious injury.

⚠ CAUTION

CAUTION indicates a hazardous situation which, if not avoided, could result in minor or moderate injury.

NOTICE

NOTICE is used to address practices not related to personal injury.

Read the following important safety information before using this equipment to avoid serious injury or death and to avoid damage to equipment or property.

WARNING

ELECTRIC SHOCK HAZARD:

- Unit must be installed by a qualified electrician. Installation must conform to all local electrical codes. Installation by unqualified personnel will void unit warranty and may lead to electric shock or burn, as well as damage to unit and/or its surroundings.
- Turn OFF power switch, turn off power at circuit breaker, and allow unit to cool before performing any cleaning, adjustments, or maintenance.
- DO NOT submerge or saturate with water. Unit is not waterproof. Do not operate if unit has been submerged or saturated with water.
- Unit is not weatherproof. Locate unit indoors where ambient air temperature is a minimum of 70°F (21°C).
- Remote control enclosure must be mounted on vertical wall and installed in vertical position. Mounting remote control enclosure in horizontal position may result in collection of liquids and lead to electric shock.
- Operating voltage of remote control enclosure water valve exceeds 50 V (extra low voltage). Enclosure is marked with the following hazard identification symbol: ϟ
- Do not use unit to melt or hold ice. Doing so may cause condensation, creating an electrical hazard and causing personal injury and/or damage to unit. Damage caused by condensation is not covered by warranty.
- For non-Auto-Fill units, turn off unit when filling with water and avoid splashing.
- Do not clean unit when it is energized or hot.
- This unit is not "jet-proof" construction. Do not use jet-clean spray to clean this unit.
- This unit must be serviced by qualified personnel only. Service by unqualified personnel may lead to electric shock or burn.
- Use only Genuine Hatco Replacement Parts when service is required. Failure to use Genuine Hatco Replacement Parts will void all warranties and may subject operators of the equipment to hazardous electrical voltage, resulting in electrical shock or burn. Genuine Hatco Replacement Parts are specified to operate safely in the environments in which they are used. Some aftermarket or generic replacement parts do not have the characteristics that will allow them to operate safely in Hatco equipment.

FIRE HAZARD:

- Install unit with a minimum of 3-1/2" (89 mm) of space from bottom of unit to all combustible surfaces to prevent combustion.
- Unit must be installed using ribbon putty gasket between unit and installation surface per installation instructions (refer to Installation section of this manual).
- Do not use flammable cleaning solutions to clean this unit.

This unit must be installed by qualified, trained installers. Installation must conform to all local electrical and plumbing codes. Check with local plumbing and electrical inspectors for proper procedures and codes.

This unit is not intended for use by children or persons with reduced physical, sensory, or mental capabilities. Ensure proper supervision of children and keep them away from unit.

Make sure all operators have been instructed on the safe and proper use of unit.

WARNING

Make sure food product has been heated to the proper food-safe temperature before placing in the unit. Failure to heat food product properly may result in serious health risks. This unit is for holding pre-heated food product only.

Hatco Corporation is not responsible for actual food product serving temperature. It is the responsibility of the user to ensure food product is held and served at a safe temperature.

This unit has no "user-serviceable" parts. If service is required on this unit, contact an Authorized Hatco Service Agent or contact the Hatco Service Department at 800-558-0607 or 414-671-6350; fax 800-690-2966; or International fax 414-671-3976.

CAUTION

BURN HAZARD:

- Some exterior surfaces on unit will get hot. Use caution when touching these areas.
- Drain water may reach temperatures in excess of 200°F (93°C). Use appropriate plumbing materials when installing drain.
- DO NOT clean unit while it contains any food product. Remove food product and allow unit to cool completely before cleaning.

Locate unit at proper counter height in an area that is convenient for use. The location should be strong enough to support the weight of unit and contents.

Auto-Fill units must be installed with adequate backflow protection and must conform with all federal, state, and local codes.

NOTICE

Units are voltage-specific. Refer to specification label for electrical requirements before beginning installation.

Standard and approved manufacturing oils may smoke up to 30 minutes during initial startup. This is a temporary condition. Operate unit without food product until smoke dissipates.

Unit must be allowed to cool down to room temperature before changing from wet-to-dry or dry-to-wet operation. Allowing unit to run dry during wet operation or adding water during dry operation will damage unit.

Do not locate unit in an area subject to excessive temperatures or grease from grills, fryers, etc. Excessive temperatures could cause damage to unit.

Remote control enclosure must have a minimum 6" (152 mm) clearance from unit (not to exceed 72" [1829 mm]). Mounting remote control enclosure closer may cause heat damage to electrical system in control enclosure.

Damage to any countertop material caused by heat generated from Hatco equipment is not covered under the Hatco warranty. Contact the manufacturer of the countertop material for application information.

Use non-abrasive cleaners only. Abrasive cleaners could scratch the finish of unit, marring its appearance and making it susceptible to soil accumulation.

Do not use steel wool for cleaning. Steel wool will scratch the finish.

Do not use harsh chemicals such as bleach, cleaners containing bleach, or oven cleaners to clean this unit.

MODEL DESCRIPTION

All Models

All Slim Drop-In Heated Wells are reliable and versatile. Each well has an insulated, stainless steel and aluminized steel housing with a metal-sheathed heating element. The heating element is controlled with a thermostatic temperature control and a lighted POWER ON/OFF switch housed in a remote control enclosure. The remote control enclosure is connected to the unit with 72″ (1829 mm) flexible conduit assemblies. Slim Drop-In Heated Wells are hardwired directly to a power source for a secure and cord free serving area. All models are equipped with EZ locking hardware and designed to be mounted to the topside of a non-combustible countertop. Slim Drop-In Heated Wells are designed, manufactured, and tested to maintain safe food holding temperatures.

HWBI-S2, -S3, and -S4 Models

HWBI-S models are capable of holding a variety of pan combinations in each heated well.

- One full size pan
- Two 1/2-size pans with adapter bar.
- Three 1/3-size pans with adapter bars.
- Six 1/6-size pans with adapter bars.
- Two 7 quart (7 l) round pans with adapter top.
- Three 4 quart (4 l) round pans with adapter top.

Food Pans, Pan Support Bars, and Adapter Tops sold separately (refer to the OPTIONS AND ACCESSORIES section in this manual).

HWBI-S2D, -S3D, and -S4D Models

HWBI-SXD models have the same capabilities as the HWBI-SX models but are equipped with a separate drain in each well. Each drain includes a 3/4″ NPT drain fitting and a flat drain screen that allows pans to stay level for consistent temperatures.

HWBI-S2DA, -S3DA, and -S4DA Models

HWBI-SXDA models have the same capabilities as the HWBI-SXD models but also are equipped with the Auto-Fill feature.

HWBI-S2M, -S3M, and -S4M Models

HWBI-SXM models have the same capabilities as the HWBI-SX models but are equipped with a manifold drain assembly. The manifold drain assembly is equipped with 1″ NPT drain fittings. The drain fittings can be located on each end of the unit or on the bottom of the unit. Each well connected to the manifold drain assembly includes a flat drain screen that allows pans to stay level for consistent temperatures.

HWBI-S2MA, -S3MA, and -S4MA Models

HWBI-SXMA models have the same capabilities as the HWBI-SXM models but also are equipped with the Auto-Fill feature.

NOTE: HWBI-S4 models for Canada have all controls in a single control enclosure.

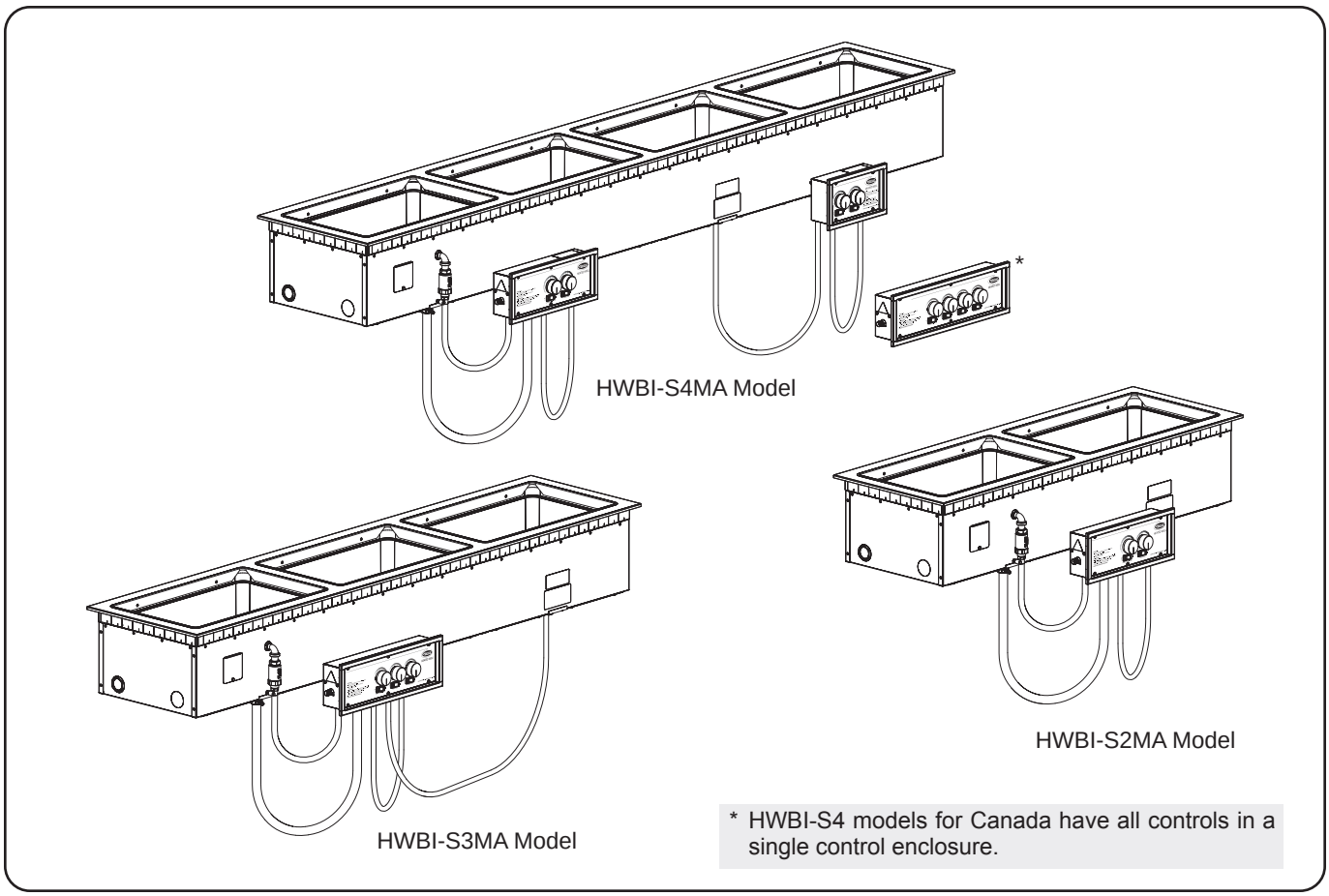

Figure 1. HWBI-S Models

MODEL DESIGNATION

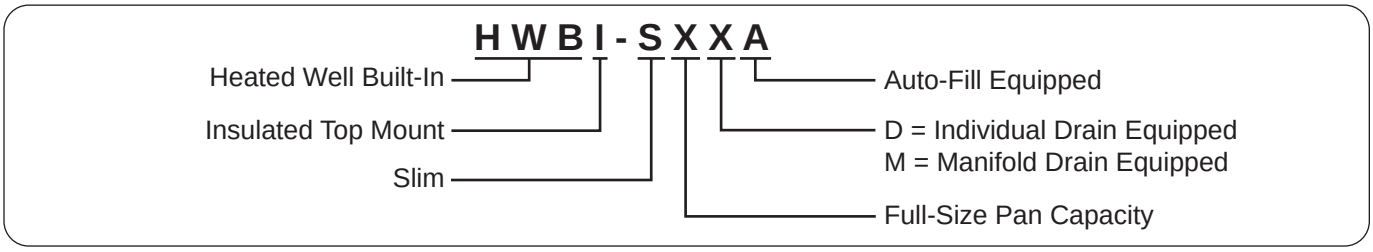

Figure 2. Model Designation

SPECIFICATIONS

Dimensions

Model	Width (A)	Depth (B)	Height (C)
HWBI-S2	45-1/2″ (1156 mm)	15-5/8″ (397mm)	9-7/16″ (238 mm)
HWBI-S3	67-1/2″ (1715 mm)	15-5/8″ (397 mm)	9-7/16″ (238 mm)
HWBI-S4	89-1/2″ (2273 mm)	15-5/8″ (397 mm)	9-7/16″ (238 mm)

NOTE: Specification labels are located on the side of the unit and on the bottom of the control enclosure.

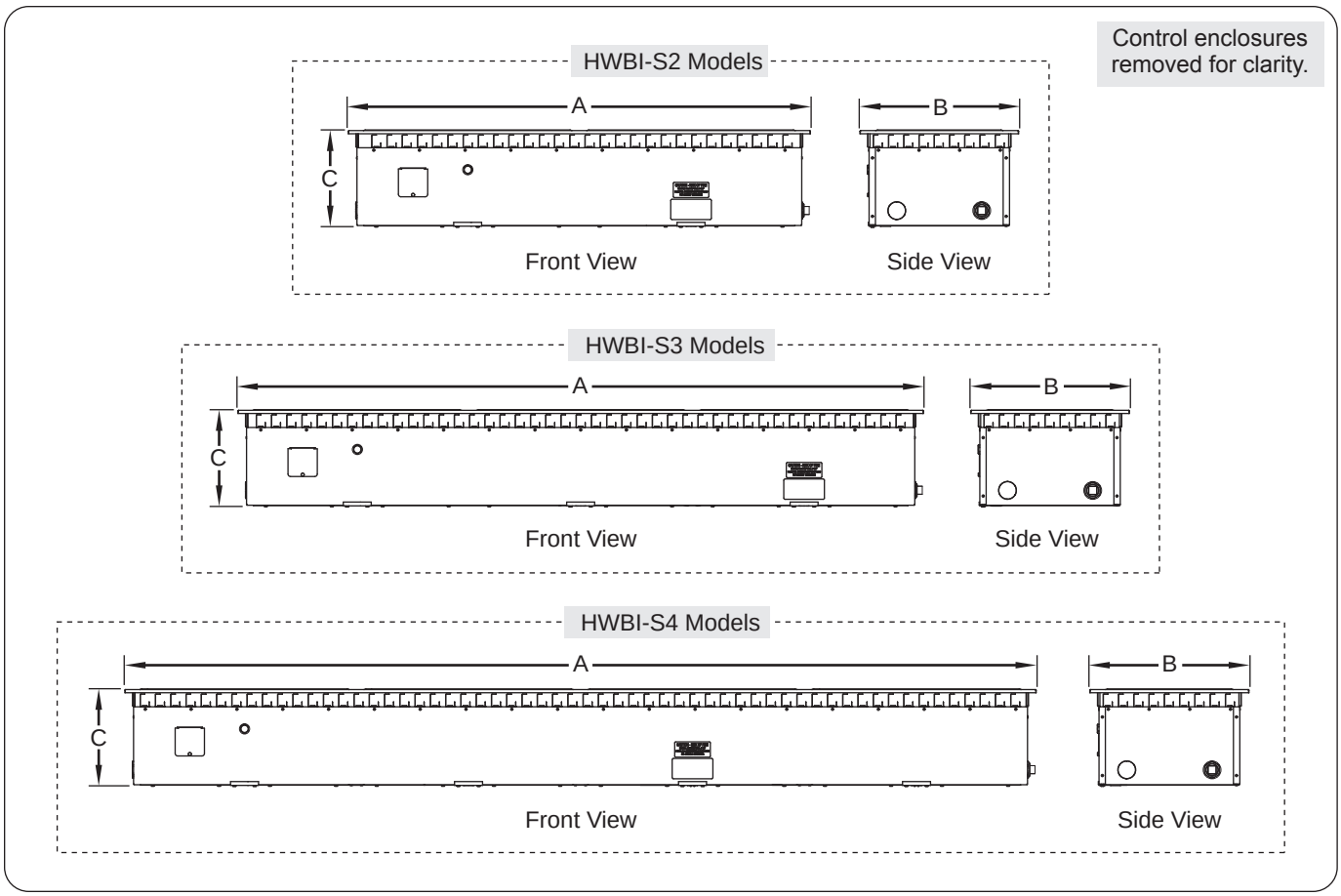

Figure 3. Dimensions

SPECIFICATIONS

Electrical Rating Chart

Model	Voltage	Circuit	Watts	Amps	Phase	Shipping Weight ‡
HWBI-S2	208	1	2415	11.6	1	64 lbs. (29 kg)
	208	1	2415	10.1	3	64 lbs. (29 kg)
	240	1	2415	10.1	1	64 lbs. (29 kg)
	240	1	2415	8.7	3	64 lbs. (29 kg)
	220–230 (CE)	1	2415–2640	11.0–11.5	1	64 lbs. (29 kg)
	230–240 (CE)	1	2218–2415	9.6–10.1	1	64 lbs. (29 kg)
HWBI-S3	208	1	3615	17.4	1	94 lbs. (43 kg)
	208	1	3615	10.1	3	94 lbs. (43 kg)
	240	1	3615	15.1	1	94 lbs. (43 kg)
	240	1	3615	8.8	3	94 lbs. (43 kg)
	220–230 (CE)	1	3615–3951	16.4–17.2	1	94 lbs. (43 kg)
	230–240 (CE)	1	3320–3615	14.4–15.1	1	94 lbs. (43 kg)
HWBI-S4	208†	1	2415	11.6	1	124 lbs. (56 kg)
		2	2400	11.5	1	
	208	1	4815	15.8	3	124 lbs. (56 kg)
	240†	1	2415	10.1	1	124 lbs. (56 kg)
		2	2400	10.0	1	
	240	1	4815	13.7	3	124 lbs. (56 kg)
	220–230 (CE)	1	4815–5262	21.9–22.9	1	124 lbs. (56 kg)
	230–240 (CE)	1	4422–4815	19.2–20.1	1	124 lbs. (56 kg)

The shaded areas contain electrical information for **International models only**.

‡ Add 3 lbs. (1.4 kg) for “D” and “DA” models.

† Unit with multiple circuit connections. Each circuit requires a separate circuit breaker**.**

NOTE: Shipping weight includes packaging.

Water Supply Specifications (Auto-Fill Units)

	Minimum	Maximum
Water Pressure	25 psi (172 kPa)	100 psi (689 kPa)
Water Temperature	35°F (2°C)	100°F (38°C)

General

Slim Drop-In Heated Well units are shipped from the factory with most components assembled and ready for use. Use the following procedures to install the unit.

NOTE: All Slim Drop-In Heated Wells require the control enclosure to be remote mounted.

⚠ WARNING

ELECTRIC SHOCK HAZARD:

- **Unit must be installed by a qualified electrician. Installation must conform to all local electrical codes. Installation by unqualified personnel will void unit warranty and may lead to electric shock or burn, as well as damage to unit and/or its surroundings.**
- **Unit is not weatherproof. Locate unit indoors where ambient air temperature is a minimum of 70°F (21°C).**

FIRE HAZARD:

- **Install unit with a minimum of 3-1/2″ (89 mm) of space from bottom of unit to all combustible surfaces to prevent combustion.**
- **Unit must be installed using ribbon putty gasket between unit and installation surface per installation instructions (refer to INSTALLATION section of this manual).**

This unit must be installed by qualified, trained installers. Installation must conform to all local electrical and plumbing codes. Check with local plumbing and electrical inspectors for proper procedures and codes.

⚠ CAUTION

Locate unit at proper counter height in an area that is convenient for use. The location should be strong enough to support the weight of unit and contents.

NOTICE

Units are voltage-specific. Refer to specification label for electrical requirements before beginning installation.

Do not locate unit in an area subject to excessive temperatures or grease from grills, fryers, etc. Excessive temperatures could cause damage to unit.

Remote control enclosure must have a minimum 6″ (152 mm) clearance from unit (not to exceed 72″ [1829 mm]). Mounting remote control enclosure closer may cause heat damage to electrical system in control enclosure.

Damage to any countertop material caused by heat generated from Hatco equipment is not covered under the Hatco warranty. Contact the manufacturer of the countertop material for application information.

1. Remove the unit from the box.

NOTE: To prevent delay in obtaining warranty coverage, complete online warranty registration. See the IMPORTANT OWNER INFORMATION *section for details.*

2. Remove tape and protective packaging from all surfaces of unit.

NOTE: A qualified electrician should connect the unit(s) to a power source. A qualified plumber should connect the water supply and drain(s).

3. Install the unit in the desired location (refer to the “Installing the Unit” procedure later in this section).
4. Install the remote control enclosure (refer to the “Installing a Remote Control Enclosure” procedure later in this section).

Installing the Unit

NOTE: Cut the opening for both the unit and the control enclosure(s) before placing unit into the countertop opening.

1. Make sure the control enclosure installation location(s) is within reach of the conduit assemblies that run beween the unit and the control enclosure(s).
2. Cut the appropriate opening in the countertop. Refer to the “Countertop Cutout Dimensions” chart in this section.
3. Cut the appropriate opening for the control enclosure(s) Refer to the “Control Enclosure Cutout Dimensions” chart in this section.
4. Place ribbon putty gasket around the cutout edge of the countertop. Make sure the ribbon putty gasket overhangs the cutout edge or seal unit with silicone adhesive.

NOTE: A roll of ribbon putty gasket material is supplied with the unit.

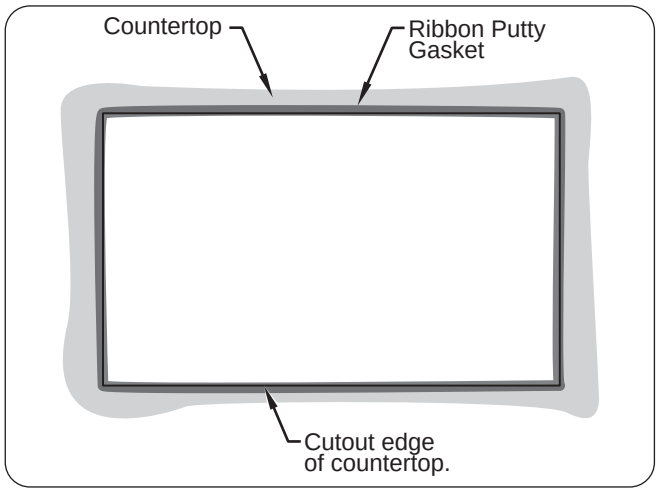

Figure 4. Installing Ribbon Putty Gasket

5. Place the unit into the countertop opening.
6. Using a screwdriver, rotate the unit’s EZ locking tabs outward to secure the unit to the underside of the countertop. Rotate as many tabs as needed to secure the unit to the countertop.

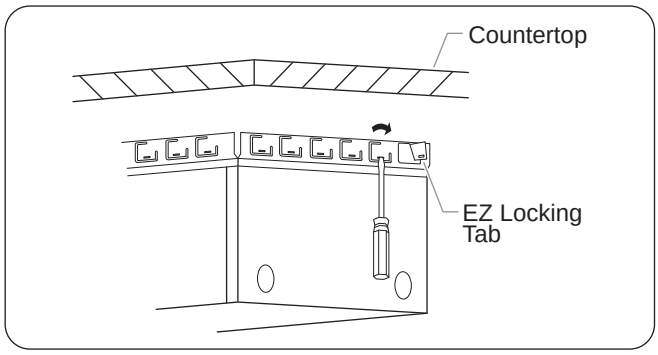

Figure 5. EZ Locking Tabs

NOTE: The Hatco EZ locking tabs work on countertops that have a maximum thickness of 3/16" (5 mm). For countertops 3/16"–2" (5–51 mm) thick, use an appropriate number of optional thick countertop adapter brackets (P/N R04.42.194.00, see Figure 6).

7. Carefully trim and remove the excess ribbon putty material from around the unit.
8. Install the control enclosure(s). Refer to the “Installing a Remote Control Enclosure” procedure in this section.

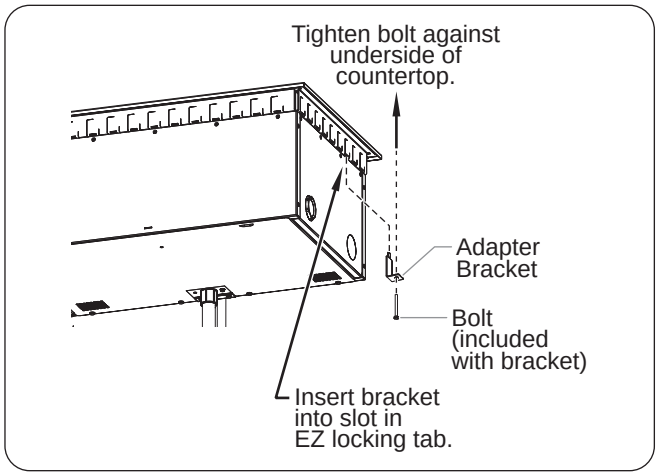

Figure 6. Thick Countertop Adapter Bracket

Countertop Cutout Dimensions

Model	Opening Width (A)	Opening Depth (B)	Below Countertop Clearance
HWBI-S2	44-1/8″ to 44-3/8″ (1120 to 1127 mm)	14-1/4″ to 14-1/2″ (362 to 368 mm)	9-5/8″ (245 mm)
HWBI-S3	66-1/8″ to 66-3/8″ (1680 to 1686 mm)	14-1/4″ to 14-1/2″ (362 to 368 mm)	9-5/8″ (245 mm)
HWBI-S2	88-1/8″ to 88-3/8″ (2238 to 2245 mm)	14-1/4″ to 14-1/2″ (362 to 368 mm)	9-5/8″ (245 mm)

NOTE: Allow additional clearance below countertop for units equipped with drains and/or Auto-Fill components.

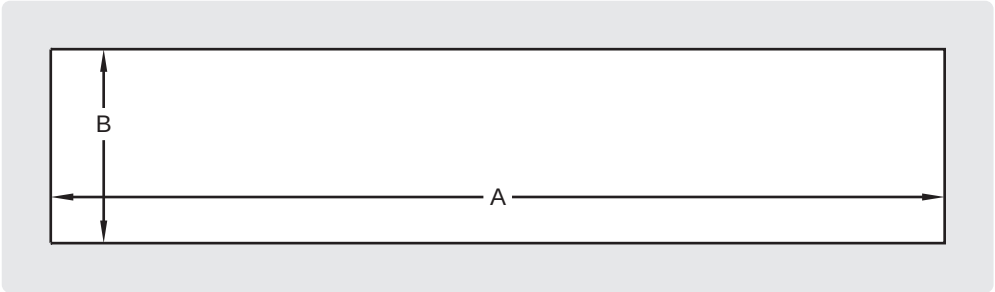

Figure 7. Countertop Cutout Dimensions (Top View)

Installing a Remote Control Enclosure

⚠ WARNING

ELECTRIC SHOCK HAZARD:

- **Remote control enclosure must be mounted on vertical wall and installed in vertical position. Mounting remote control enclosure in horizontal position may result in collection of liquids and lead to electric shock.**
- **Operating voltage of remote control enclosure water valve exceeds 50 V (extra low voltage). Enclosure is marked with the following hazard identification symbol: ϟ**

NOTE: A qualified electrician should connect the unit(s) to a power source. A qualified plumber should connect the water supply and drain(s).

1. Cut and drill the appropriate holes in the mounting surface. Refer to the "Control Enclosure Cutout Dimensions" chart below for the cutout dimensions for each control enclosure.
   - The cutout depth required for all control enclosures is 5″ (127 mm).
   - For units with two control enclosures: If the unit is equipped with Auto-Fill, each enclosure cutout size will be different (see chart below).
2. Remove the trim cover from the control enclosure.
3. Position the control enclosure into the opening through the backside.
4. Secure the control enclosure to the mounting surface using screws (#8 sheet metal screw supplied).
5. Connect the proper power source to the mounted remote control enclosure. Have a qualified electrician perform the appropriate electrical connections. Wiring must be fixed a minimum of 4″ (102 mm) from bottom of well(s).

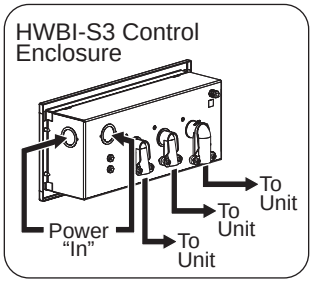

6. Connect the water supply to the optional Auto-Fill system, if equipped. Refer to the "Installing an Auto-Fill Unit" procedure in this section.
7. Reinstall the trim cover. Seal the trim cover to the mounting surface with silicone adhesive

NOTE: Standard UL approved units are equipped with 72″ (1829 mm) flexible conduit connected to the remote control enclosure.

Control Enclosure Cutout Dimensions

Model and Enclosure	Opening Width (A)	Opening Height (B)	Screw Hole Width (C)	Screw Hole Height (D)
HWBI-S2				
Control w/o Auto-Fill	8″ (203 mm)	4-3/4″ (121 mm)	8-5/16″ (210 mm)	2-1/2″ (64 mm)
Control w/Auto-Fill	12-3/8″ (314 mm)	4-3/4″ (121 mm)	12-11/16″ (321 mm)	2-1/2″ (64 mm)
HWBI-S3				
Control w/o Auto-Fill	10-1/4″ (260 mm)	4-3/4″ (121 mm)	10-9/16″ (267 mm)	2-1/2″ (64 mm)
Control w/Auto-Fill	14-5/8″ (371 mm)	4-3/4″ (121 mm)	14-15/16″ (378 mm)	2-1/2″ (64 mm)
HWBI-S4				
Left Control w/o Auto-Fill	8″ (203 mm)	4-3/4″ (121 mm)	8-5/16″ (203 mm)	2-1/2″ (64 mm)
Left Control w/Auto-Fill	12-3/8″ (314 mm)	4-3/4″ (121 mm)	12-11/16″ (321 mm)	2-1/2″ (64 mm)
Right Control	8″ (203 mm)	4-3/4″ (121 mm)	8-5/16″ (203 mm)	2-1/2″ (64 mm)
Single Enclosure w/o Auto-Fill*	12-1/2″ (318 mm)	4-3/4″ (121 mm)	12-13/16″ (324 mm)	2-1/2″ (64 mm)
Single Enclosure w/Auto-Fill*	16-7/8″ (429 mm)	4-3/4″ (121 mm)	17-3/16″ (436 mm)	2-1/2″ (64 mm)

* HWBI-S4 Series units with all controls in a single control enclosure — required for Canadian units.

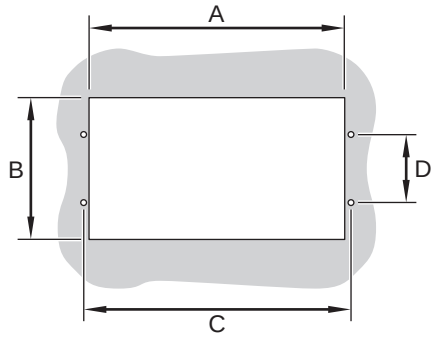

Front View of Cutout

IMPORTANT NOTE:
Make sure the installation location provides enough room for electrical and plumbing connections to the control enclosure.

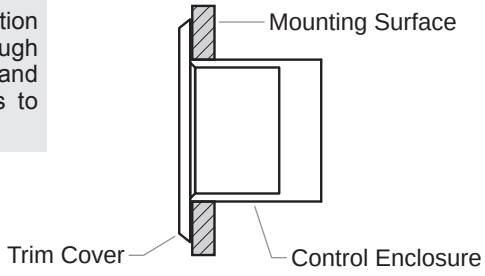

Side View of Installed Enclosure

Figure 8. Control Enclosure Cutout Dimensions

Connecting A Drain Line

After installing a drain- or manifold-equipped unit into the countertop, use the following procedure to connect the unit to the on-site drain line.

⚠ CAUTION

BURN HAZARD: Drain water may reach temperatures in excess of 200°F (93°C). Use appropriate plumbing materials when installing drain.

NOTE: Consult a licensed plumbing contractor for proper drain installation that conforms to local plumbing codes.

NOTE: Approved air gap or other back-flow prevention device must be installed by a licensed plumber, if required.

Individual Drain Units

1. Connect drain pipe (supplied by others) from the 3/4″ NPT drain fittings on the bottom of the wells to a 3/4″ drain valve (supplied by others or available as an accessory from Hatco—refer to the OPTIONS AND ACCESSORIES section).

NOTE: The drain valve must be installed in an easily accessible location for the operator.

2. Connect the drain valve to the on-site drain line (supplied by others).

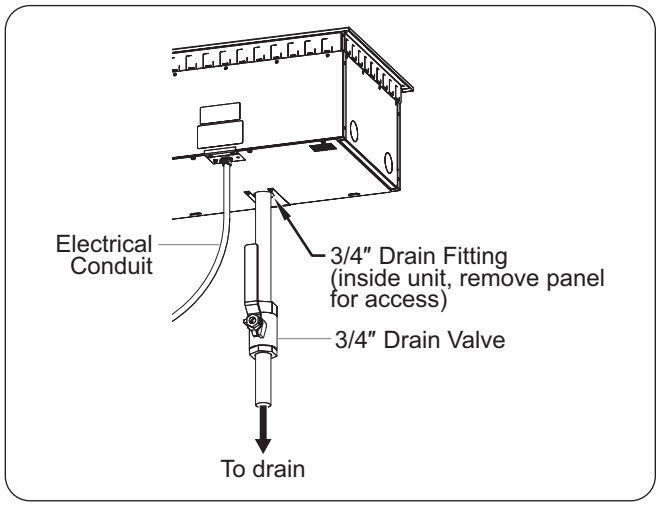

Figure 9. Individual Drain Connection

Manifold Drain Units

1. Connect drain pipe (supplied by others) from the 1″ NPT manifold drain fitting to a 1″ drain valve (supplied by others or available as an accessory from Hatco—refer to the OPTIONS AND ACCESSORIES section). The manifold drain fittings can be located on each end of the unit or on the bottom of the unit.

NOTE: The drain valve must be installed in an easily accessible location for the operator.

2. Connect the drain valve to the on-site drain line (supplied by others).
3. Install a 1″ NPT plug in the unused drain fitting.

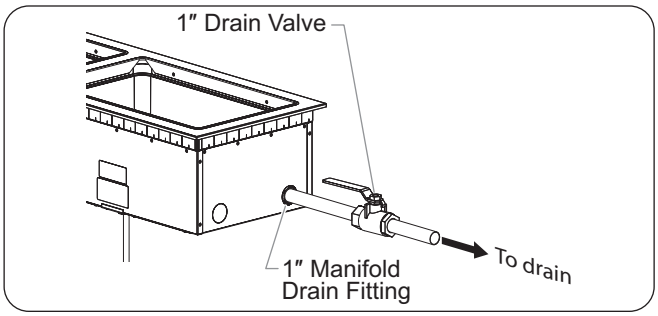

Figure 10. Manifold Drain Connection

Installing an Auto-Fill Unit

Use the following procedure to install a unit equipped with the Auto-Fill option. Refer to “Water Supply Specifications” in the SPECIFICATIONS section of this manual for water supply requirements.

⚠ CAUTION

Auto-Fill units must be installed with adequate backflow protection and must conform with all federal, state, and local codes.

1. Apply Teflon tape to the threads of the street elbow on the fill tube assembly.
2. Connect the street elbow to the Auto-Fill fitting located on the outside of the well.
3. Connect the other end of the fill tube assembly to the fill valve nipple in the control enclosure and secure using the hose clamp. (Disassemble the control enclosure trim cover to access the nipple.)
4. Connect the on-site water supply line to the 1/4″ NPT water inlet fitting on the control enclosure.

NOTE: Make sure unit is connected to the on-site drain line before testing Auto-Fill operation.

5. Turn on the water supply and check for leaks.

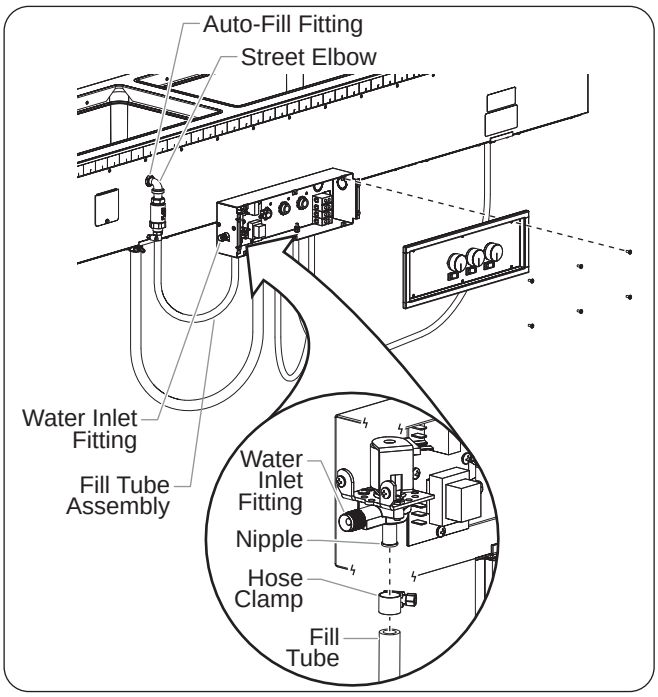

Figure 11. Installing an Auto-Fill Unit

General

Use the following procedures to operate Slim Drop-In Heated Wells.

⚠ WARNING

Read all safety messages in the Important Safety Information section before operating this equipment.

ELECTRIC SHOCK HAZARD:

- **DO NOT use unit to melt or hold ice. Doing so may cause condensation, creating an electrical hazard and causing personal injury and/or damage to unit. Damage caused by condensation is not covered by warranty.**
- **For units without Auto-Fill, turn off unit when filling with water and avoid splashing.**

NOTICE

Standard and approved manufacturing oils may smoke up to 30 minutes during initial startup. This is a temporary condition. Operate unit without food product until smoke dissipates.

Unit must be allowed to cool down to room temperature before changing from wet-to-dry or dry-to-wet operation. Allowing unit to run dry during wet operation or adding water during dry operation will damage unit.

Hatco Slim Drop-In Heated Wells are designed for WET or DRY operation. Hatco recommends wet operation for consistent food heating. If the unit is operating wet and is allowed to run dry, turn it off and allow to cool before adding water.

Startup

1. Prepare the heated wells for operation.
   - If using the wells for dry operation, make sure the wells are clean and dry.
   - If using the wells for wet operation without Auto-Fill, make sure the drain valve is closed (if equipped) and manually fill the wells with hot tap water until the water is a maximum of 1-1/4″ (32 mm) deep.
   - If the unit is equipped with the Auto-Fill option, make sure the drain valve is closed and go to step #2 in this procedure.
2. Move the POWER ON/OFF switches to the ON position. The indicator light on each switch glows when it is on.
   - If the unit is equipped with the Auto-Fill option, the far left POWER ON/OFF switch will activate the Auto-Fill system when it is moved to the ON position. The wells will fill with water until the water reaches the water level sensor in the far left well. During operation, the Auto-Fill system will maintain the water level automatically using the water level sensor.

NOTE: For HWBI-S4 units equipped with Auto-Fill, turn on the left-hand control first, then turn on the right-hand control.

3. Turn the Temperature Control Knobs to the desired safe food temperature.

⚠ WARNING

Hatco Corporation is not responsible for actual food product serving temperature. It is the responsibility of the user to ensure food product is held and served at a safe temperature.

4. Allow the unit to preheat for approximately 30 minutes.

⚠ CAUTION

BURN HAZARD: Some exterior surfaces on unit will get hot. Use caution when touching these areas.

Food Warming

Place the appropriate size food pans with pre-heated food product into the heated wells.

- Always use a food pan. Do not place food directly into the heated well.
- Stir thick food items frequently to keep food heated uniformly.
- Keep pans covered to maintain food quality and temperature.

Shutdown

1. Move the POWER ON/OFF switches to the OFF position. The indicator light on the switches will shut off and the Auto-Fill system will be deactivated (if equipped).

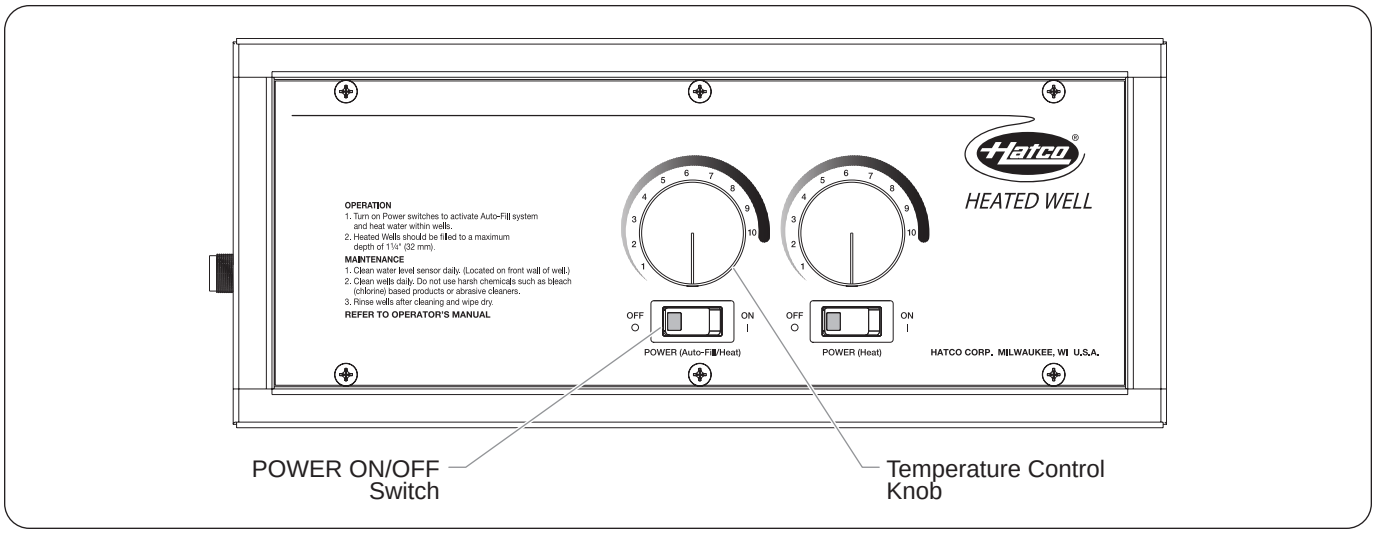

Figure 12. HWBI-S2DA Control Enclosure (unit with drains and Auto-Fill)

MAINTENANCE

General

Hatco Slim Drop-In Heated Wells are designed for maximum durability and performance, with minimum maintenance.

⚠ WARNING

ELECTRIC SHOCK HAZARD:

- **Turn OFF power switch, turn off power at circuit breaker, and allow unit to cool before performing any cleaning, adjustments, or maintenance.**
- **DO NOT submerge or saturate with water. Unit is not waterproof. Do not operate if unit has been submerged or saturated with water.**
- **Do not clean unit when it is energized or hot.**
- **This unit is not "jet-proof" construction. Do not use jet-clean spray to clean this unit.**

FIRE HAZARD: Do not use flammable cleaning solutions to clean this unit.

This unit has no "user-serviceable" parts. If service is required on this unit, contact an Authorized Hatco Service Agent or contact the Hatco Service Department at 800-558-0607 or 414-671-6350; fax 800-690-2966; or International fax 414-671-3976.

NOTICE

Do not use steel wool for cleaning. Steel wool will scratch the finish.

Use non-abrasive cleaners only. Abrasive cleaners could scratch the finish of the unit, marring its appearance and making it susceptible to soil accumulation.

Do not use harsh chemicals such as bleach, cleaners containing bleach, or oven cleaners to clean this unit.

Daily Cleaning

1. Move the POWER ON/OFF switches to the OFF position and allow the unit to cool.
2. Remove and wash any pans and adapters.
3. Open the drain valve (if equipped) or manually remove water from the wells if used for wet operation.
4. Wipe the entire unit down using a clean cloth or sponge and mild detergent.
5. Use a plastic scouring pad to remove any hardened food particles or mineral deposits.
6. Rinse the well(s) thoroughly with hot water to remove all detergent residue, and wipe dry.

Weekly Cleaning

Use the following procedure weekly or whenever lime or scale is seen accumulating on the sides of the heated wells.

1. Move the POWER ON/OFF switches to the OFF position and allow the unit to cool.
2. Remove and wash any pans and adapters.
3. Open the drain valve (if equipped) or manually remove water from the wells if used for wet operation.
4. Close the drain valve (if equipped) and add water to the wells until the water is at normal operating level (1″ to 1-1/4″ [25 mm to 32 mm] deep) or covers the accumulated scale.
5. Move the POWER ON/OFF switch to the ON position and heat water to the maximum temperature of 190°F (88°C).
6. Add white vinegar to the wells so that the resulting solution is approximately 2-parts vinegar to 5-parts water.
7. Move the POWER ON/OFF switch to the OFF position and cover the wells.
8. Allow the solution to soak for at least one hour or overnight for heavy buildup.
9. Drain or remove the hot water/cleaning solution from the wells.
10. Scrub the wells with a plastic scouring pad.
11. Rinse the wells thoroughly with hot water, and wipe dry.

NOTE: Heavy scale buildup may require additional treatments.

⚠ WARNING

This unit must be serviced by qualified personnel only. Service by unqualified personnel may lead to electric shock or burn.

⚠ WARNING

ELECTRIC SHOCK HAZARD: Turn OFF power switch, turn off power at circuit breaker, and allow unit to cool before performing any cleaning, adjustments, or maintenance.

Symptom	Probable Cause	Corrective Action
Heated wells not hot enough.	Temperature Control(s) set too low.	Adjust Temperature Control(s) to a higher setting.
	Heating element(s) not working.	Contact Authorized Service Agent or Hatco for assistance.
	Temperature Control(s) not working properly.	Contact Authorized Service Agent or Hatco for assistance.
	Voltage supplied is incorrect.	Verify correct voltage is supplied to unit. Low supply voltage will cause improper heating.
Heated wells too hot.	Temperature Control(s) set too high.	Adjust Temperature Control(s) to a lower setting.
	Temperature Control(s) not working properly.	Contact Authorized Service Agent or Hatco for assistance.
	Voltage supplied is incorrect.	Verify correct voltage is supplied to unit. High supply voltage will cause unit to overheat and may damage the unit.
No heat.	Unit turned off.	Turn on unit.
	Circuit breaker tripped.	Reset circuit breaker. If circuit breaker continues to trip, contact Authorized Service Agent or Hatco for assistance.
	Temperature Control(s) not working properly.	Contact Authorized Service Agent or Hatco for assistance.
	Heating element(s) not working.	Contact Authorized Service Agent or Hatco for assistance.
Auto-fill system not working.	Water level sensor is dirty and not “sensing” properly.	Perform the “Weekly Cleaning” procedure in the Maintenance section with special focus on the water level sensor (located inside the far left well).
	Water fill valve malfunctioning.	Contact Authorized Service Agent or Hatco for assistance.

OPTIONS AND ACCESSORIES

Pan Support Bars

The following pan support bars are available to divide the heated wells into sections for different size pans.

HWBGM12BAR ....12″ (305 mm) Pan Support Bar

HWBGM20BAR ....20″ (508 mm) Pan Support Bar

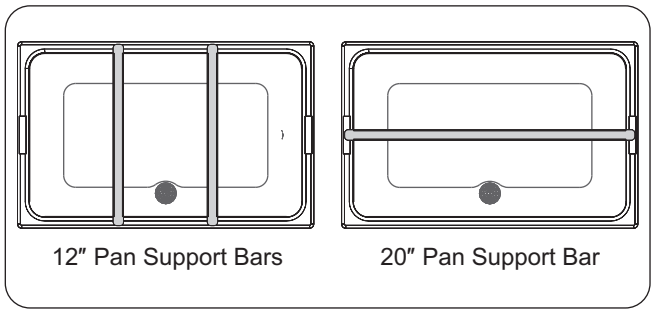

Figure 13. Pan Support Bars

Adapter Tops

The following adapter tops are available to allow rectangular heated wells to hold round pans.

HWB-2-7Q.....Adapter to convert HWBI-S Series heated wells to hold two 7-quart (7 l) round pans.

HWB-3-4Q.....Adapter to convert HWBI-S Series heated wells to hold three 4-quart (4 l) round pans.

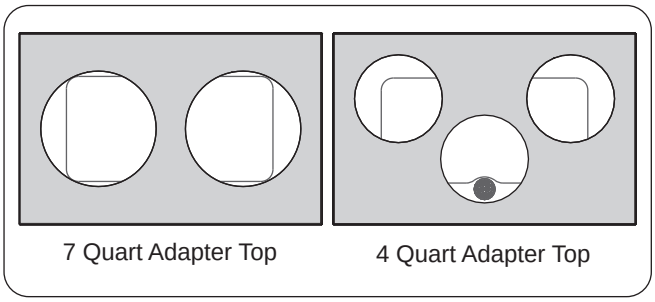

Figure 14. Adapter Tops

OPTIONS AND ACCESSORIES

Food Pans

Stainless steel food pans are available in various sizes.

ST PAN 1/3 .....Third-size stainless steel pan — 12-3/4″W x 6-7/8″D x 2-1/2″H (324 x 175 x 64 mm)

ST PAN 1/2 .....Half-size stainless steel pan — 12-3/4″W x 10-3/8″D x 2-1/2″H (324 x 264 x 64 mm)

ST PAN 2.....Full size stainless steel pan at 2-1/2″ (64 mm) deep — 12-3/4″W x 20-3/4″D x 2-1/2″H (324 x 527 x 64 mm)

ST PAN 4.....Full size stainless steel pan at 4″ (102 mm) deep — 12-3/4″W x 20-3/4″D x 4″H (324 x 527 x 102 mm)

4QT-PAN .....4 quart (4 l) round pan — 6-3/4″ dia x 8″H (171 x 203 mm)

7QT-PAN .....7 quart (7 l) round pan — 8-11/16″ dia x 8″H (221 x 203 mm)

4QT-LID-1 .....4 quart (4 l) round, notched lid

7QT-LID-1 .....7 quart (7 l) round, notched lid

4QT-LID.....4 quart (4 l) round, hinged and notched lid

7QT-LID.....7 quart (7 l) round, hinged and notched lid

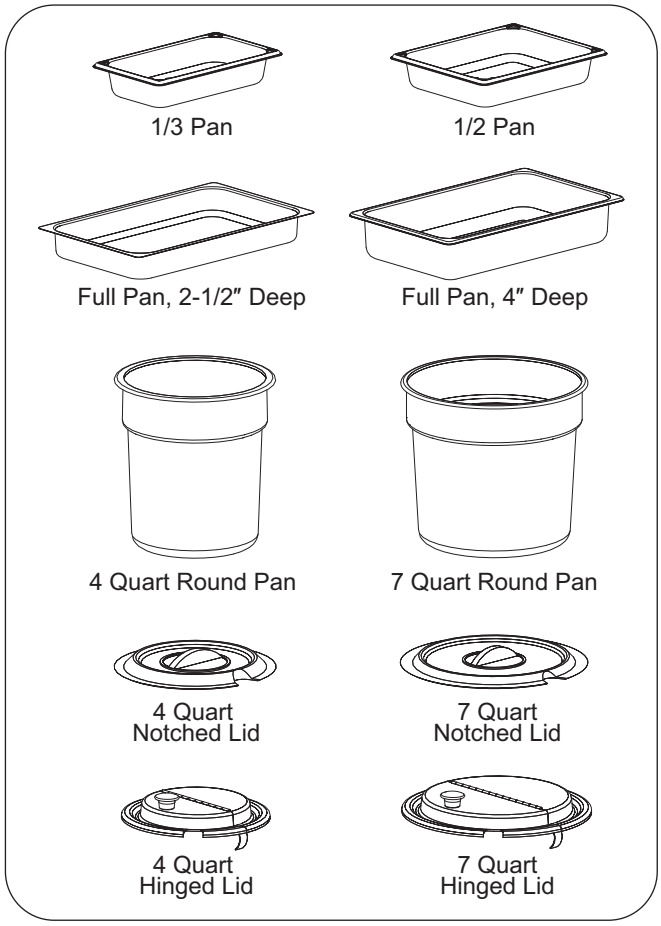

Figure 15. Stainless Steel Food Pans

Trivets

Stainless steel or nickel-plated trivets are available in various sizes.

TRIVET (1/4)SS ....Quarter-size stainless steel trivet — 8-1/2″W x 4-1/2″D (216 x 114 mm)

TRIVET (1/2)SS ....Half-size stainless steel trivet — 10-3/16″W x 7-5/8″D (259 x 194 mm)

TRIVET SS .....Full size stainless steel trivet — 10-1/8″W x 18″D (257 x 457 mm)

TRIVET (1/2) .....Half-size nickel-plated trivet — 10-3/16″W x 7-5/8″D (259 x 194 mm)

TRIVET .....Full size nickel-plated trivet — 10-1/8″W x 18″D (257 x 457 mm)

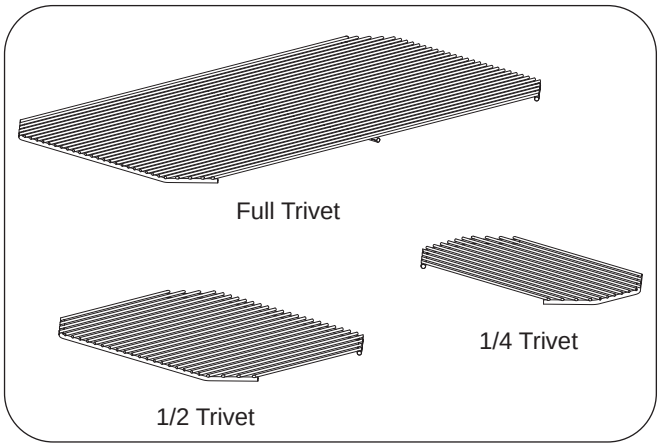

Figure 16. Trivets

Miscellaneous

BALLVALVE3/4 .....3/4″ NPT ball valve for installation on external drain line of units with individual drains.

BALLVALVE1INCH ..1″ NPT ball valve for installation on external drain line of units with manifold drain assemblies.

GATEVALVE3/4IN .....3/4″ NPT gate valve for installation on external drain line of units with individual drain assemblies.

GATEVALVE1INCH ..1″ NPT gate valve for installation on external drain line of units with manifold drain assemblies.

Adapter Bracket
R04.42.194.00 .....Adapter bracket for installing heated wells into non-combustible countertops that are 3/16″–2″ (5–51 mm) thick.

Converting a Unit to 3-Phase

HWBI-S2, -S3, and -S4 units can be converted to a 3-phase electrical configuration. Use the following procedure to convert a single phase unit to the 3-phase option.

⚠ WARNING

ELECTRIC SHOCK HAZARD:

- **Turn OFF power switch, turn off power at circuit breaker, and allow unit to cool before performing any cleaning, adjustments, or maintenance.**
- **This unit must be serviced by qualified personnel only. Service by unqualified personnel may lead to electric shock or burn.**

1. Make sure the POWER ON/OFF switch is in the OFF position and the main power supply is off at the circuit breaker.
2. Remove the trim cover from the control enclosure.
   - For HWBI-S4 units with two control enclosures, only remove the trim cover from the enclosure on the right (when facing the operator side of the unit) to perform the 3-phase conversion.
3. Locate the terminal block in the control enclosure and perform the appropriate wiring changes to convert the unit to 3-phase. Refer to the proper wiring diagram (supplied with unit) listed below for the details regarding the wiring changes.
   - **Wiring Diagram 10-01-549** = All HWBI-S2 and HWBI-S3 units as well as HWBI-S4 units with two control enclosures.
   - **Wiring Diagram 10-01-565** = All HWBI-S4 units with a single control enclosure.

NOTE: To obtain a wiring diagram, contact an Authorized Service Agent or Hatco for assistance (refer to the back page of this manual).

4. After the 3-phase conversion is complete, apply the "CONVERTED TO 3 PHASE" label to the inside of the control enclosure, next to the terminal block. The label is included in the information packet with this manual.
5. Replace the trim cover on the control enclosure.
6. Reconnect the power supply and test the unit for proper operation.

LIMITED WARRANTY

1. PRODUCT WARRANTY

Hatco warrants the products that it manufactures (the "Products") to be free from defects in materials and workmanship, under normal use and service, for a period of one (1) year from the date of purchase when installed and maintained in accordance with Hatco's written instructions or 18 months from the date of shipment from Hatco. Buyer must establish the Product's purchase date by returning Hatco's Warranty Registration Card or by other means satisfactory to Hatco in its sole discretion.

Hatco warrants the following Product components to be free from defects in materials and workmanship from the date of purchase (subject to the foregoing conditions) for the period(s) of time and on the conditions listed below:

a) **One (1) Year Parts and Labor PLUS One (1) Additional Year Parts-Only Warranty:**
Conveyor Toaster Elements (metal sheathed)
Drawer Warmer Elements (metal sheathed)
Drawer Warmer Drawer Rollers and Slides
Food Warmer Elements (metal sheathed)
Display Warmer Elements (metal sheathed air heating)
Holding Cabinet Elements (metal sheathed air heating)
Built-In Heated Well Elements — HWB, HWBI, and HWBI-S Series (metal sheathed)

b) **One (1) Year Parts and Labor PLUS Four (4) Years Parts-Only Warranty on pro-rated terms that Hatco will explain at Buyer's request:**
3CS and FR Tanks

c) **One (1) Year Parts and Labor PLUS Nine (9) Years Parts-Only Warranty on:**
Electric Booster Heater Tanks
Gas Booster Heater Tanks

d) **Ninety (90) Day Parts-Only Warranty:**
Replacement Parts

THE FOREGOING WARRANTIES ARE EXCLUSIVE AND IN LIEU OF ANY OTHER WARRANTY, EXPRESSED OR IMPLIED, INCLUDING BUT NOT LIMITED TO ANY IMPLIED WARRANTY OF MERCHANTABILITY OR FITNESS FOR A PARTICULAR PURPOSE OR PATENT OR OTHER INTELLECTUAL PROPERTY RIGHT INFRINGEMENT. Without limiting the generality of the foregoing, SUCH WARRANTIES DO NOT COVER: Coated incandescent light bulbs, fluorescent lights, heat lamp bulbs, coated halogen light bulbs, halogen heat lamp bulbs, xenon light bulbs, glass components, and fuses; Product failure in booster tank, fin tube heat exchanger, or other water heating equipment caused by liming, sediment buildup, chemical attack, or freezing; or Product misuse, tampering or misapplication, improper installation, or application of improper voltage.

2. LIMITATION OF REMEDIES AND DAMAGES

Hatco's liability and Buyer's exclusive remedy hereunder will be limited solely, at Hatco's option, to repair or replacement using new or refurbished parts or Product by Hatco or a Hatco-authorized service agency (other than where Buyer is located outside of the United States, Canada, United Kingdom, or Australia, in which case Hatco's liability and Buyer's exclusive remedy hereunder will be limited solely to replacement of part under warranty) with respect to any claim made within the applicable warranty period referred to above. Hatco reserves the right to accept or reject any such claim in whole or in part. In the context of this Limited Warranty, "refurbished" means a part or Product that has been returned to its original specifications by Hatco or a Hatco-authorized service agency. Hatco will not accept the return of any Product without prior written approval from Hatco, and all such approved returns shall be made at Buyer's sole expense. HATCO WILL NOT BE LIABLE, UNDER ANY CIRCUMSTANCES, FOR CONSEQUENTIAL OR INCIDENTAL DAMAGES, INCLUDING BUT NOT LIMITED TO LABOR COSTS OR LOST PROFITS RESULTING FROM THE USE OF OR INABILITY TO USE THE PRODUCTS OR FROM THE PRODUCTS BEING INCORPORATED IN OR BECOMING A COMPONENT OF ANY OTHER PRODUCT OR GOODS.

HATCO AUTHORIZED PARTS DISTRIBUTORS

ALABAMA
Jones McLeod Appl. Svc.
Birmingham 205-251-0159

ARIZONA
Service Solutions Group
Phoenix 602-234-2443

Byassee Equipment Co.
Phoenix 602-252-0402

CALIFORNIA
Industrial Electric
Commercial Parts & Service, Inc.
Huntington Beach 714-379-7100

Chapman Appl. Service
San Diego 619-298-7106

P & D Appliance
Commercial Parts & Service, Inc.
S. San Francisco 650-635-1900

COLORADO
Hawkins Commercial Appliance
Englewood 303-781-5548

FLORIDA
Whaley Foodservice Repair
Jacksonville 904-725-7800

3Wire Nass Service Co., Inc.
Orlando 407-425-2681

B.G.S.I.
Pompano Beach 954-971-0456

Comm. Appliance Service
Tampa 813-663-0313

GEORGIA
TWC Services
Mableton 770-438-9797

Heritage Service Group
Norcross 866-388-9837

Southeastern Rest. Svc.
Norcross 770-446-6177

HAWAII
Burney's Comm. Service, Inc.
Honolulu 808-848-1466

Food Equip Parts & Service
Honolulu 808-847-4871

ILLINOIS
Parts Town
Lombard 708-865-7278

Eichenauer Elec. Service
Decatur 217-429-4229

Midwest Elec. Appl. Service
Elmhurst 630-279-8000

Cone's Repair Service
Moline 309-797-5323

INDIANA
GCS Service
Indianapolis 317-545-9655

IOWA
Electric Motor Service Co.
Davenport 319-323-1823

Goodwin Tucker Group
Des Moines 515-262-9308

KENTUCKY
Service Solutions Group
Lexington 859-254-8854

Service Solutions Group
Louisville 502-451-5411

LOUISIANA
Chandlers Parts & Service
Baton Rouge 225-272-6620

MARYLAND
Electric Motor Service
Baltimore 410-467-8080

GCS Service
Silver Spring 301-585-7550

MASSACHUSETTS
Ace Service Co., Inc.
Needham 781-449-4220

MICHIGAN
Bildons Appliance Service
Detroit 248-478-3320

Commercial Kitchen Service
Bay City 517-893-4561

Midwest Food Equip. Service
Grandville 616-261-2000

MINNESOTA
GCS Service
Plymouth 800-345-4221

MISSOURI
General Parts
Kansas City 816-421-5400

Commercial Kitchen Services
St. Louis 314-890-0700

Kaemmerlen Parts & Service
St. Louis 314-535-2222

NEBRASKA
Anderson Electric
Omaha 402-341-1414

NEVADA
Burney's Commercial
Las Vegas 702-736-0006

Hi. Tech Commercial Service
N. Las Vegas 702-649-4616

NEW JERSEY
Jay Hill Repair
Fairfield 973-575-9145

Service Plus
Flanders 973-691-6300

NEW YORK
Acme American Repairs, Inc.
Brooklyn 718-456-6544

Alpro Service Co.
Brooklyn 718-386-2515

Appliance Installation
Buffalo 716-884-7425

Duffy's Equipment Services, Inc.
Buffalo 800-836-1014

3Wire Northern
Plattsburgh 800-634-5005

Duffy's Equipment Services, Inc.
Sauquoit 800-836-1014

J.B. Brady, Inc.
Syracuse 315-422-9271

NORTH CAROLINA
Authorized Appliance
Charlotte 704-377-4501

OHIO
Akron/Canton Comm. Svc. Inc.
Akron 330-753-6635

Service Solutions Group
Cincinnati 513-772-6600

Commercial Parts and Service
Columbus 614-221-0057

Electrical Appl. Repair Service
Brooklyn Heights 216-459-8700

E. A. Wichman Co.
Toledo 419-385-9121

OKLAHOMA
Hagar Rest. Service, Inc.
Oklahoma City 405-235-2184

Krueger, Inc.
Oklahoma City 405-528-8883

OREGON
Ron's Service, Inc.
Portland 503-624-0890

PENNSYLVANIA
Elmer Schultz Services
Philadelphia 215-627-5401

FAST Comm. Appl. Service
Philadelphia 215-288-4800

Appliance Installation & Service
Pittsburgh 412-809-0244

K & D Service Co.
Harrisburg 717-236-9039

Electric Repair Co.
Reading 610-376-5444

RHODE ISLAND
Marshall Electric Co.
Providence 401-331-1163

SOUTH CAROLINA
Whaley Foodservice Repair
W. Columbia 803-791-4420

TENNESSEE
Camp Electric
Memphis 901-527-7543

TEXAS
GCS Service
Fort Worth 800-433-1804

Armstrong Repair Service
Houston 713-666-7100

Cooking Equipment Specialist
Mesquite 888-866-9276

Refrigerated Specialist, Inc.
Mesquite 888-866-9276

Commercial Kitchen Repair Co.
San Antonio 210-735-2811

UTAH
La Monica's Rest. Equip. Service
Murray 801-263-3221

VIRGINIA
Daubers
Norfolk 757-855-4097

Daubers
Springfield 703-866-3600

WASHINGTON
3Wire Restaurant Appliance
Seattle 800-207-3146

WISCONSIN
A.S.C., Inc.
Madison 608-246-3160

A.S.C., Inc.
Milwaukee 414-543-6460

CANADA

ALBERTA
Key Food Equipment Service
Edmonton 780-438-1690

BRITISH COLUMBIA
Key Food Equipment Service
Vancouver 604-433-4484

Key Food Equipment Service
Victoria 250-920-4888

MANITOBA
Air Rite, Inc.
Winnipeg 204-895-2300

NEW BRUNSWICK
EMR Services, Ltd.
Moncton 506-855-4228

ONTARIO
R.G. Henderson Ltd.
Toronto 416-422-5580

Choquette - CKS, Inc.
Ottawa 613-739-8458

QUÉBEC
Choquette - CKS, Inc.
Montreal 514-722-2000

Choquette - CKS, Inc.
Québec City 418-681-3944

UNITED KINGDOM

Marren Group
Northants +44(0)1933 666233

HATCO CORPORATION
P.O. Box 340500
Milwaukee, WI 53234-0500 U.S.A.
(800) 558-0607 (414) 671-6350
Parts and Service Fax (800) 690-2966
International Fax (414) 671-3976
partsandservice@hatcocorp.com
www.hatcocorp.com

Register your unit online!
See IMPORTANT OWNER INFORMATION for more information.

Printed in U.S.A. February 2011 P/N 07.04.563.00 Form No. HWBISM-0211