CARDINAL®

EB series BENCH SCALES

Featuring 190 STORM weight indicator

LOADED WITH FEATURES

- Large 1-inch-high clear and bold LCD readouts
- Rugged IP69K-rated polycarbonate weight display
- Durable stainless steel base and column

SPLASHPROOF

Model EB-15-190

Multiple Sizes and Capacities

Model EB-300-190

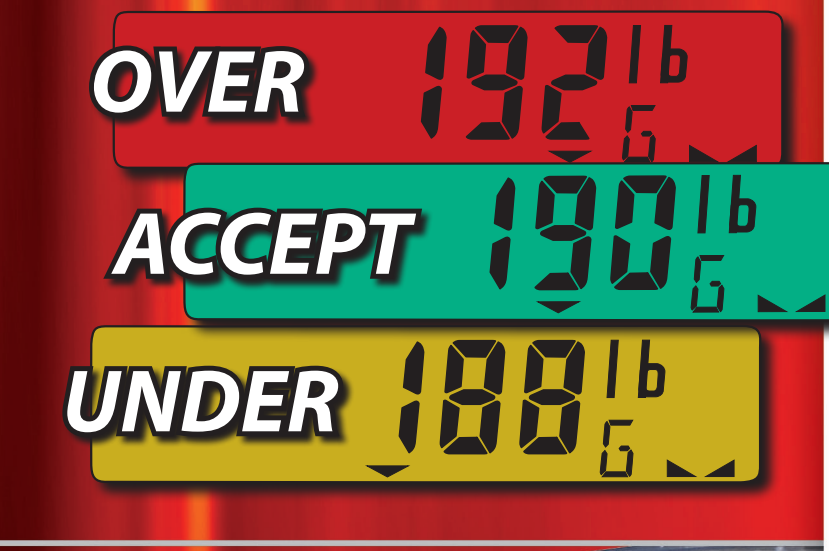

COLORZONE CHECKWEIGHING

ColorZONE is the solution for efficient time management during your checkweighing processes. The bright, vivid display, changes color automatically as the pre-assigned target weights are reached. You know immediately when you've hit the acceptable weight range. EB bench scales featuring the 190 indicator display amber for under weight, green for accepted weights, and bright red when weights exceed the upper weight limit. The target weights are easy to assign using the scale's capacitive touch keypad and can be quickly changed as different sized products are weighed.





Stab, poke, and prod it... the EB series bench scales' model 190 indicator will hold up to the abuse!

The Cardinal EB bench scale series features the 190 STORM indicator which offers IP69K protection against sharp objects often used in food processing environments.

ULTRA-TOUGH CONSTRUCTION

The combination of the 190 STORM weight indicator's rugged polycarbonate enclosure with the capacitive touch keys provide the ultimate in protection. The IP69K water-tight, highly-durable enclosure allows operation in the harshest environments while the EB bench scale's stainless steel construction ensures the day in and day out dependability you require for your most demanding weighing applications.

CAPACITIVE TOUCH KEYS

Capacitance is a measure of a person's ability to hold an electrical charge. The 190 indicator used with the EB bench scale features a unique capacitance sensing keyboard that eliminates the need for any opening in the front of the indicator. Special circuitry behind the front panel of the 190 senses the presence of the operator's finger and responds accordingly. A red status LED for each key signals to the operator that their touch has been received.





EB series BENCH SCALES

- Food Processing
- Chemical Industry
- Pharmaceutical
- Recycling
- Food Packaging

Featuring **190 STORM** weight indicator

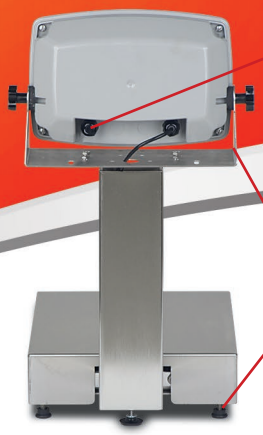

Built-in RS232 serial communications port

Adjustable mounting bracket tilts the display for convenient viewing angle

Adjustable feet for uneven weighing surfaces



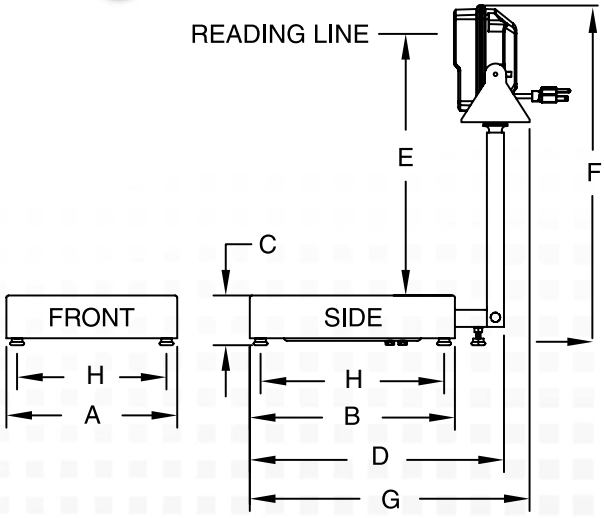

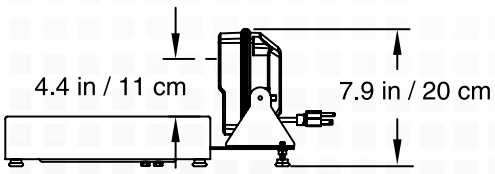

LPAN MODELS

NATIONAL CONFERENCE ON WEIGHTS AND MEASURES NTEP LEGAL FOR TRADE

PLATFORM SIZE

MODEL	CAPACITY	SHIPPING WT.	A	B	C	D	E	F	G	H
EB-15-190	15 lb x .005 lb 6 kg x .002 kg	25 lb / 11 kg	10 in 25 cm	12 in 30 cm	2.9 in 7 cm	15 in 38 cm	14.7 in 37 cm	19.7 in 50 cm	16.5 in 42 cm	8.5 x 10.5 in 22 x 27 cm
EB-30-190	30 lb x .01 lb 15 kg x .005 kg									
EB-60-190	60 lb x .02 lb 30 kg x .01 kg	39 lb / 18 kg	14 in 36 cm	16 in 41 cm	3.2 in 8 cm	19 in 48 cm	21.4 in 54 cm	26.4 in 67 cm	20 in 51 cm	12 x 14 in 30 x 36 cm
EB-150-190	150 lb x .05 lb 60 kg x .02 kg									
EB-300-190	300 lb x .1 lb 150 kg x .05 kg	79 lb / 36 kg	24 in 61 cm	20 in 51 cm	5.1 in 13 cm	22 in 56 cm	18.7 in 47 cm	25.9 in 66 cm	23.5 in 60 cm	20.9 x 16.9 in 53 x 43 cm

LPAN models also available without the stainless steel column in the same capacities as listed above. Add -LPAN suffix to model number.

SPECIFICATIONS

Power Requirements:	100 to 240 VAC (50/60 Hz) at 0.4A Max.
Enclosure Type **Indicator:** **Scale Base:**	 IP69K-rated polycarbonate Stainless steel
Display:	Six digit, seven segment, 1.0-inch/25-mm high backlit LCD
Signal Input Range:	0.5 mV min. to 40 mV max. (with dead load boost)
Operating Temperature:	14 to 104 °F (-10 to +40 °C)
Number of Load Cells:	6 each, 350 OHM minimum resistance
Transducer Excitation:	5.18 VDC
Sensitivity: NON-COMMERCIAL COMMERCIAL	 0.15 uV/e 0.5uV/e (Class III/IIIL/IIIHD)
Scale Divisions: NON-COMMERCIAL COMMERCIAL	 100 to 240,000 100 to 10,000 (Class III/IIIL/IIIHD)
Internal Resolution:	1 part in 16,777,216
Tare Capacity:	Scale capacity
Sample Rate:	1 to 100 samples per second, selectable
Auto Zero Range:	0.5 or 1 through 9 divisions
Weighing Units:	Pounds, Kilograms, Grams, Ounces
Keypad:	Color coded capacitive touch type, 7 keys
Standard I/O:	(1) bi-directional RS232

POWER OPTIONS



Model 190 Indicator
AC Power *(shown left)*
Comes standard

Both the 190 and 190DC may utilize an optional rechargeable Lithium Ion battery.

Model 190DC Indicator
DC Power *(shown left)*

Optional DC Power Supply

STORM

Model 190 INDICATOR DIMENSIONS

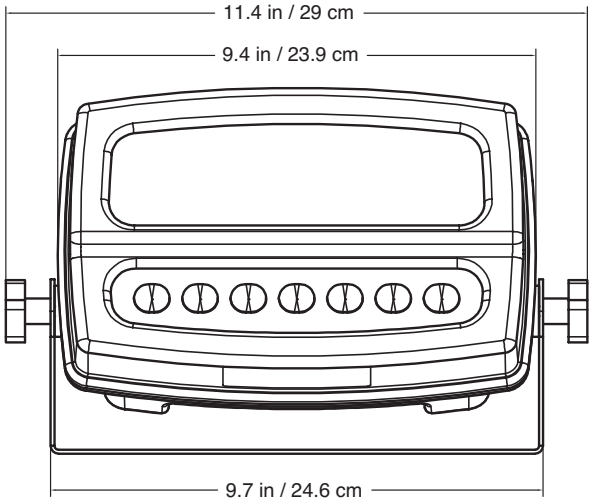

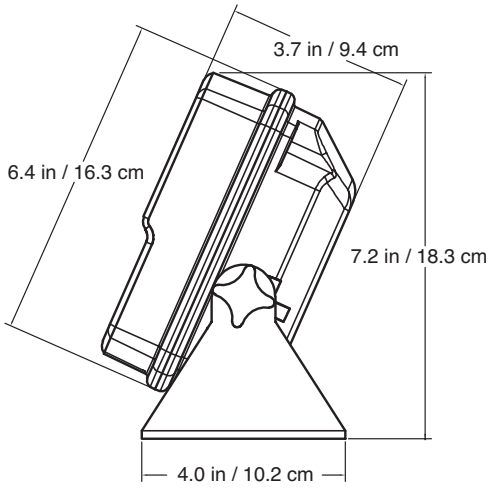

CERTIFICATIONS

Certificate of Conformance
INDICATOR: 10-084
SCALE BASE: 03-031

MEASUREMENT CANADA
Notice of Approval
INDICATOR: AM-5804
SCALE BASE: AM-5526

INDICATOR:
R76/1992-DK3-11.05

Cardinal Scale reserves the right to improve, enhance or modify features and specifications without prior notice. All registered trademarks are the property of their respective owners.

MADE IN USA
of American and foreign components

SOLD BY:

CARDINAL®

102 East Daugherty St., Webb City, MO 64870 USA
Toll-Free: (800) 441-4237 E-mail: cardinal@cardet.com
www.CardinalScale.com

© Copyright 2024 Cardinal Scale Mfg. Co. • Printed in USA • CAR/00/0524/358B