GAS CHARBROILER

RADIANT MODELS: GCB-18S, GCB-24S, GCB-36S, GCB-48S
LAVA ROCK MODELS: GCRB-24S, GCRB-36S, GCRB-48S



GCB-24S

APW Wyott Countertop Gas Charbroilers are constructed with stainless steel front panel and reinforced aluminized steel side panels. Every 12" (30.5 cm) an individually controlled, corrosion resistant, burner supplies up to 30,000 BTU/hr (8.8Kw) of heat. Cooking surface is heavyduty cast iron with two grid mark widths on opposite sides. Cooking surface can be adjusted for level or slanted grilling. Standing pilot is provided. A full width water pan is provided. Control knobs are protected by a stainless steel bull nose front. Char-broilers are supplied with 4" (10.2 cm) high die cast nickel plated legs with a 1-3/8" (3.5 cm) adjustment. Gas connection is 3/4" N.P.T. (male) and a convertible regulator is supplied as well as a kit for conversion to LP gas. Units are UL Gas Certified for U.S. and Canada. UL listed to NSF4 standard. Printed in the U.S.A.

APW Wyott Countertop Gas Charbroilers are the most economical and flexible countertop charbroiler in the food service industry. They offer unsurpassed performance, combining a proven control system with APW Wyott quality and durability. Available in three different sizes - 18", 24", 36" and 48".

WARRANTY

These units come with a one [1] year warranty for parts and labor.

CERTIFICATIONS

Certified by the following agencies:

c UL us

CLASSIFIED UL EPH

FEATURES AT A GLANCE

- Available in 18", 24", 36" and 48" widths.
- Stainless steel front including top rail.
- 30,000 BTU per foot.
- Aluminized steel drip pan, rear and sides.
- Adjustable flame per 12" cooking zone.
- Reversible double branding grates.
- Narrow grates have drain channels.
- Full width water pan for easy cleaning.
- Radiant units are designed with stainless steel radiants.
- Lava Rock units include 1 bag of lava rock per 12" section.
- 4" nickel plated steel legs.
- 3/4" rear gas connection.

GAS CHARBROILER

RADIANT MODELS: GCB-18S, GCB-24S, GCB-36S, GCB-48S
LAVA ROCK MODELS: GCRB-24S, GCRB-36S, GCRB-48S

EQUIPMENT DIMENSIONS (GCB-24S SHOWN BELOW)

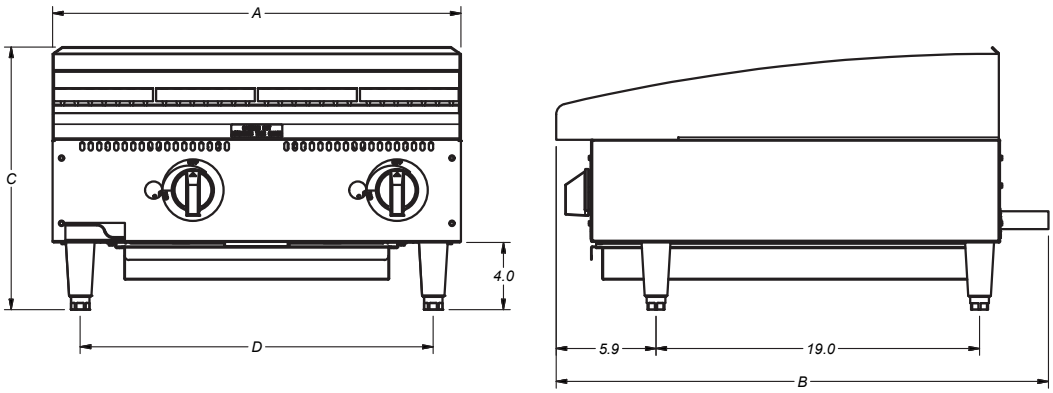

MECHANICAL SPECIFICATIONS

Model #	OveralDimensions Width (A) x Height (C) x Depth (B) (inches / mm)	Leg Width Width (D)	No. Controls	BTU	Grid Area	Ship Weight (lbs. / Kilos)	Installed Weight (lbs. / Kilos)
GCB-18S	18" x 15.5" x 28.5" (61.0 x 39.4 x 48.3)	14.75" (37.5)	1	30,000	360 SQ.IN. (2322 SQ. CM.)	123 (55.8)	86 (36)
GCB-24S	24" x 15.5" x 28.5" (61.0 x 39.4 x 48.3)	20.75" (527)	2	60,000	480 SQ.IN. (3097 SQ. CM.)	186 (84.4)	153 (69.5)
GCB-36S	36" x 15.5" x 28.5" (91.4 x 39.4 x 48.3)	32.75" (83.2)	3	90,000	720 SQ. IN. (4645 SQ. CM.)	230 (104.4)	192 (87.2)
GCB-48S	48" x 15.5" x 28.5" (121.0 x 39.4 x 48.3)	44.75" (113.7)	4	120,000	960 SQ. IN. (6194 SQ. CM.)	350 (158.9)	299 (135.7)
GCRB-24S	24" x 15.5" x 28.5" (61.0 x 39.4 x 48.3)	20.75" (52.7)	2	60,000	480 SQ.IN. (3097 SQ. CM.)	186 (84.4)	153 (69.5)
GCRB-36S	36" x 15.5" x 28.5" (91.4 x 39.4 x 48.3)	32.75" (83.2)	3	90,000	720 SQ. IN. (4645 SQ. CM.)	230 (104.4)	192 (87.1)
GCRB-48S	48" x 15.5" x 28.5" (121.0 x 39.4 x 48.3)	44.75" (113.7)	4	120,000	960 SQ. IN. (6194 SQ. CM.)	350 (158.9)	299 (135.7)

*UNITS OPERATE ON NATURAL GAS OR PROPANE GAS
3/4" (1.9 cm) N.P.T. Male Gas Connection

Freight Class: 100
FOB: Smithville, 37166

APW Wyott reserves the right to modify specifications or discontinue models without incurring obligation. Dimensions nominal.