STAINLESS STEEL

DOUBLE SIDED SELF-SERVE BUFFET SHELF

With Built-in Food Shield

Item #: _____ Qty #: _____

Model #: _____

Project #: _____



MODEL	Length (L)		Wt.	Cubic Feet
TBS-2	32”	Fits 2-Well Unit	34 lbs.	2
TBS-3	47-3/8”	Fits 3-Well Unit	42 lbs.	3
TBS-4	62-5/8”	Fits 4-Well Unit	47 lbs.	4
TBS-5	78”	Fits 5-Well Unit	55 lbs.	4
TBS-6	93-1/8”	Fits 6-Well Unit	63 lbs.	4

FEATURES:

19-1/4” high.

Built-in double sided acrylic food shields.

Food shields have 10” clearance from deck.

Removable stainless steel top shelf.

Optional acrylic side panels available to further meet additional NSF requirements (2 panels per end).

Field installation available.

MATERIAL:

Shelf: stainless steel

Food Shields: acrylic



Acrylic Side Panels for Buffet Shelf

Add side panels to meet additional NSF requirements (2 panels per end)

TBP-1 One End

TBP-2 Two Ends

Field Installation Available

DETAILS and SPECIFICATIONS

TOL Overall: ± .500” Interior: ± .250”

ALL DIMENSIONS ARE TYPICAL

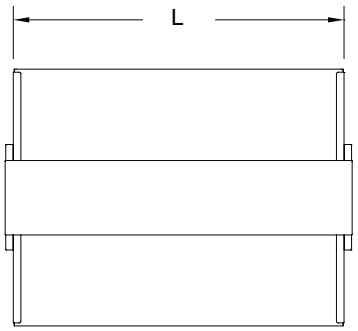

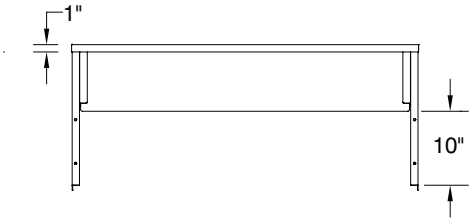

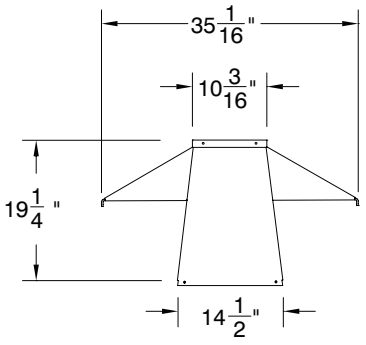

ADVANCE TABCO SMART FABRICATION™
www.advancetabco.com

Customer Service Available To Assist You 1-800-645-3166 8:30 am - 7:00 pm E.S.T.

For Orders & Customer Service:
Email: customer@advancetabco.com or **Fax:** 631-242-6900

For Smart Fabrication™ Quotes:
Email: smartfab@advancetabco.com or **Fax:** 631-586-2933

ADVANCE TABCO is constantly engaged in a program of improving our products. Therefore, we reserve the right to change specifications without prior notice. © ADVANCE TABCO, DECEMBER 2019 **REF-V**