INSTRUCTIONS FOR USE

C5 4 SERIES INSULATION ARMOUR™ PLUS HOT OR COLD FOOD TRANSPORT CABINETS



TABLE OF CONTENTS

Safety Information 2
Identify your Cabinet 2
Product Details 3
Installation and Setup 3
Reversing the Door Hinging 5
Care and Maintenance 8
Replacement Parts 8
Warranty 10

DESCRIPTION

Metro Heated Cabinets are for Hot and Cold Food Holding applications only.

SAFETY INFORMATION

⚠ WARNING ***This cabinet is designed for hot and cold food holding applications.***

⚠ WARNING ***C5 4 Series transport cabinet (Polymer Insulation Armour panels on the sides, top and rear) must not be placed next to char boilers. Allow 18" (46cm) between Insulation Armour and any cooking equipment. Do not allow hot kitchen equipment whose surfaces exceed 200° F (90° C) to touch the panels.***

IDENTIFYING YOUR CABINET

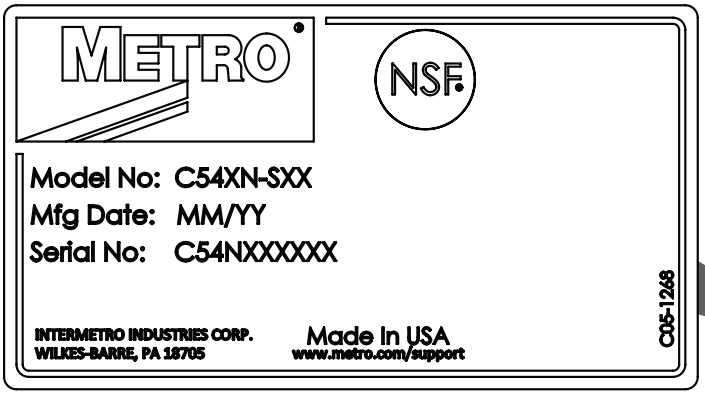

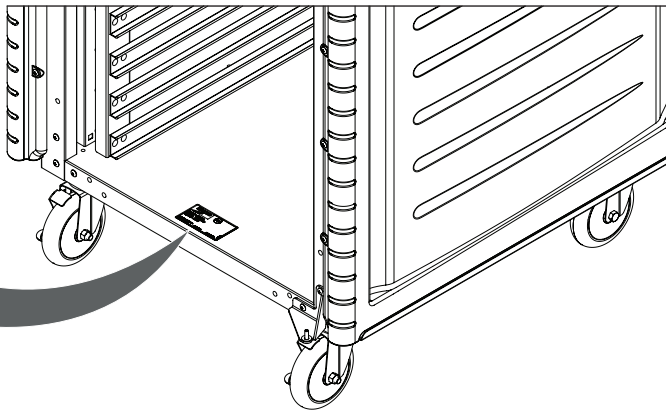

For future reference, note the serial and model number found on the data plate of the cabinet here:

Model number _____

Serial number _____

Date the cabinet was put into service _____

Fill out and return the warranty card located at the back of this manual.

Part Numbering

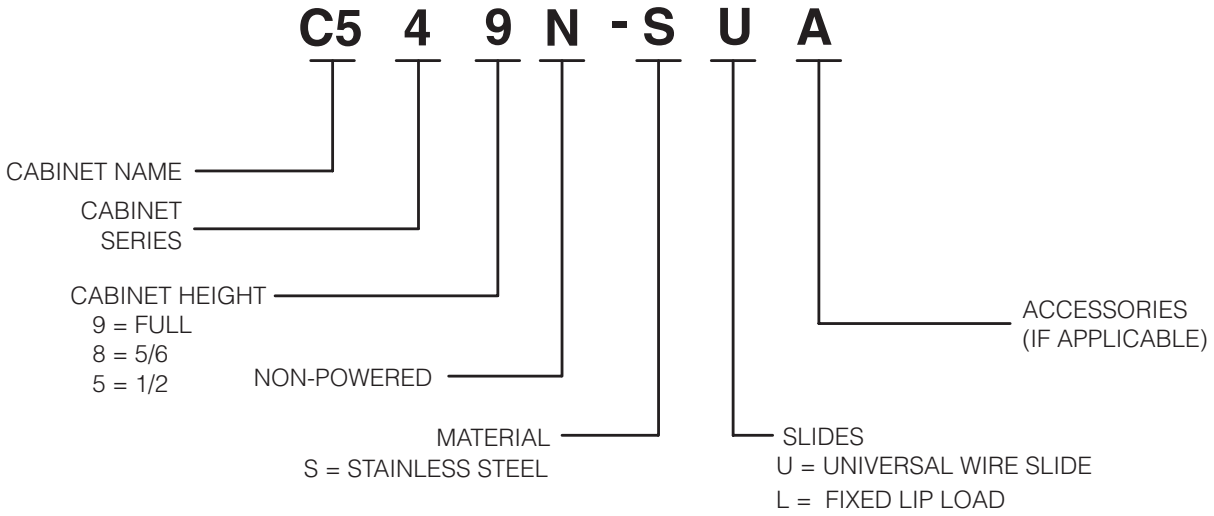

PRODUCT DETAILS

(FULL HEIGHT CABINET SHOWN)

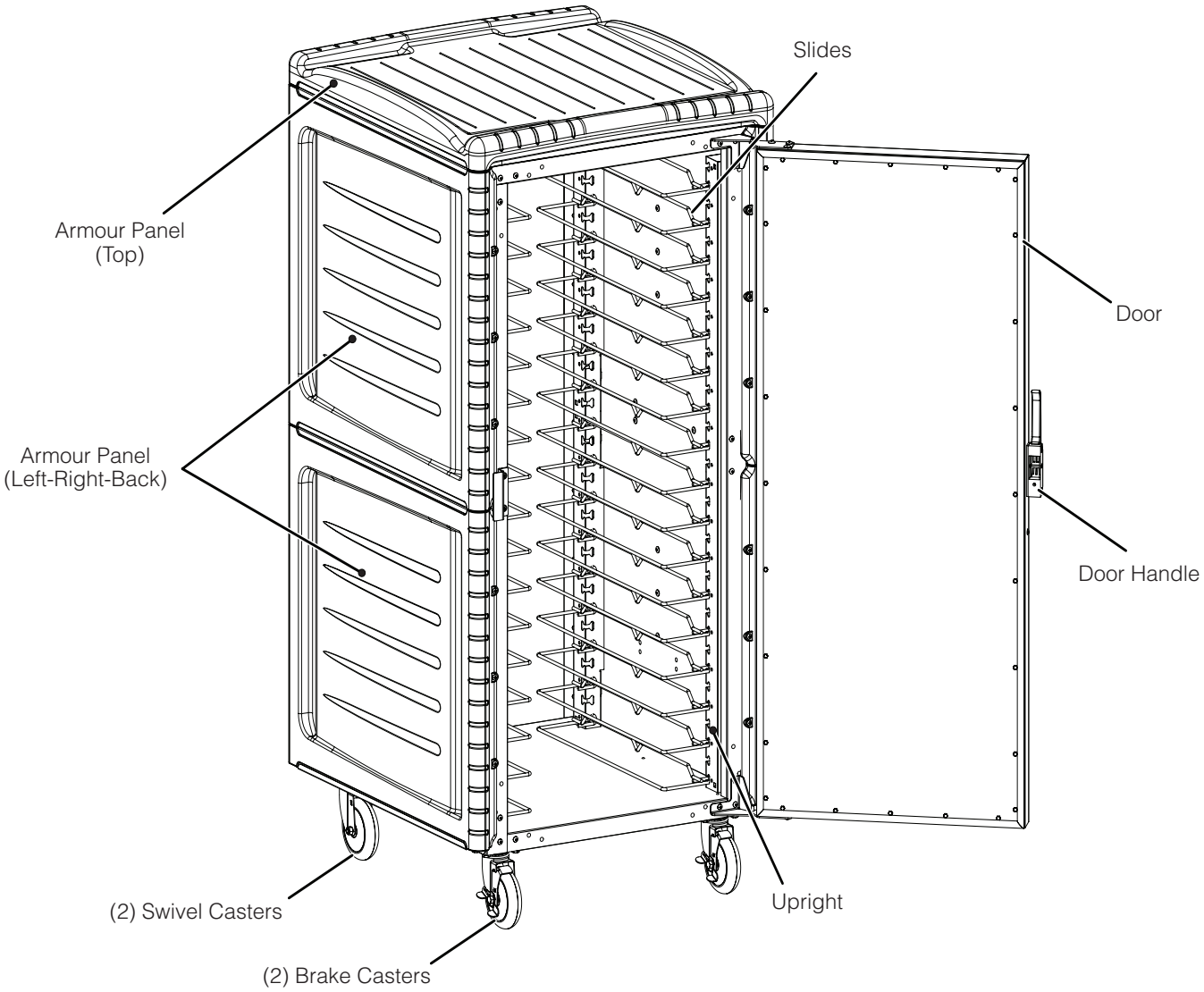

INSTALLATION AND SETUP

1. Check the packaging and cabinet for shipping damage after unloading the unit, and after removing all the packaging.
2. The receiver of this product is responsible for filing freight damage claims. This equipment must be opened immediately for inspection. All visible damage must be reported to the freight company within 48 hours and must be noted on freight bill at the time of delivery.
3. Concealed damage is your responsibility — you must advise the carrier of any loss or damage within 15 days after receipt of the cabinet. If there is damage, retain the original packaging for inspectors.
4. Remove all packaging material from inside as well as outside of the unit.

Slide Installation

The universal rack uprights or lip load slides have been installed at the factory.

If removed for cleaning, reinstall by hanging them on the rack hangers on the side walls of the cabinet.

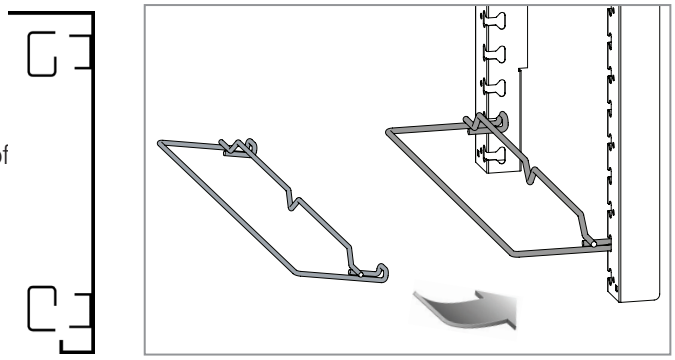

Slide Position to Maximize Universal Slide Pan Capacity when Slides are Spaced on 3" Centers

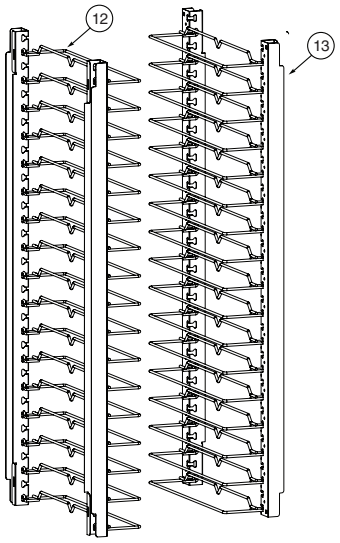

Complete set of universal slides and uprights for full height cabinet
Part No. RPC54-9-URACK
17 Levels

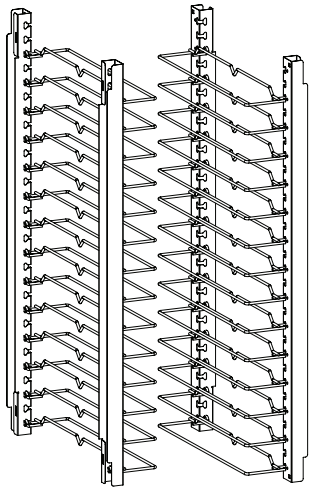

Complete set of universal slides and uprights for 5/6 height cabinet
Part No. RPC54-8-URACK
14 Levels

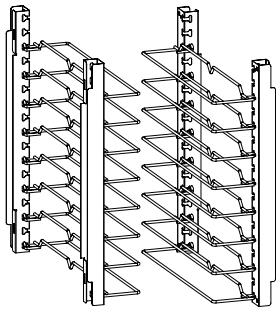

Complete set of universal slides and uprights for 1/2 height cabinet
Part No. RPC54-5-URACK
8 Levels

For additional pairs of wire slides, order C5-USLIDEPR-C for Chrome or C5-USLIDEPR-S for Stainless Steel.
To order individual universal uprights only, see item # 13.

Fixed Lip Load Slide Configurations

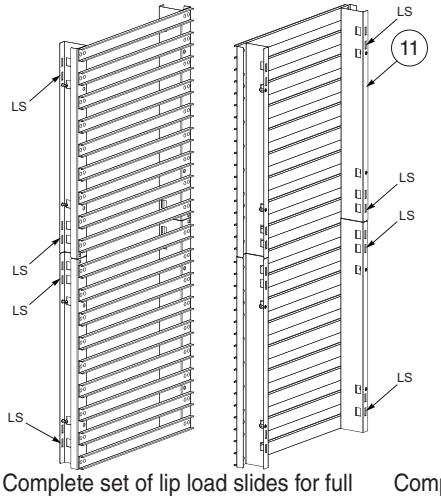

Complete set of lip load slides for full height cabinet
Part No. RPC54-9-LRACK

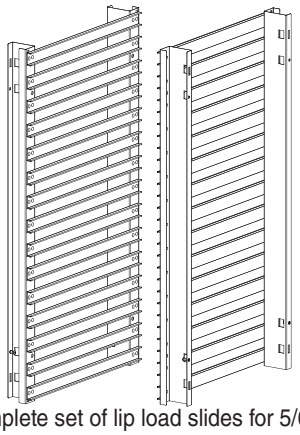

Complete set of lip load slides for 5/6 height cabinet
Part No. RPC54-8-LRACK

NOTE: Lip load slide racks include adjustment screws to help accommodate variations in sheet pan sizes from different pan manufacturers. Turn the screw clockwise to tighten the slides, and counter-clockwise to loosen them. Full, 5/6, and ½ height cabinet racks have (4) adjustments points on each rack.

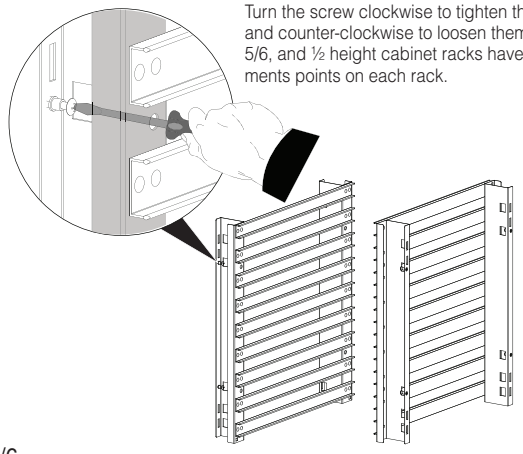

Complete set of lip load slides for 1/2 height cabinet
Part No. RPC54-5-LRACK

REVERSING THE DOOR HINGING

NOTE: Retain all hardware as these are used during door reversal.

The door on your cabinet can be reversed to accommodate a right- or left-hand opening. To reverse, follow the instructions listed below:

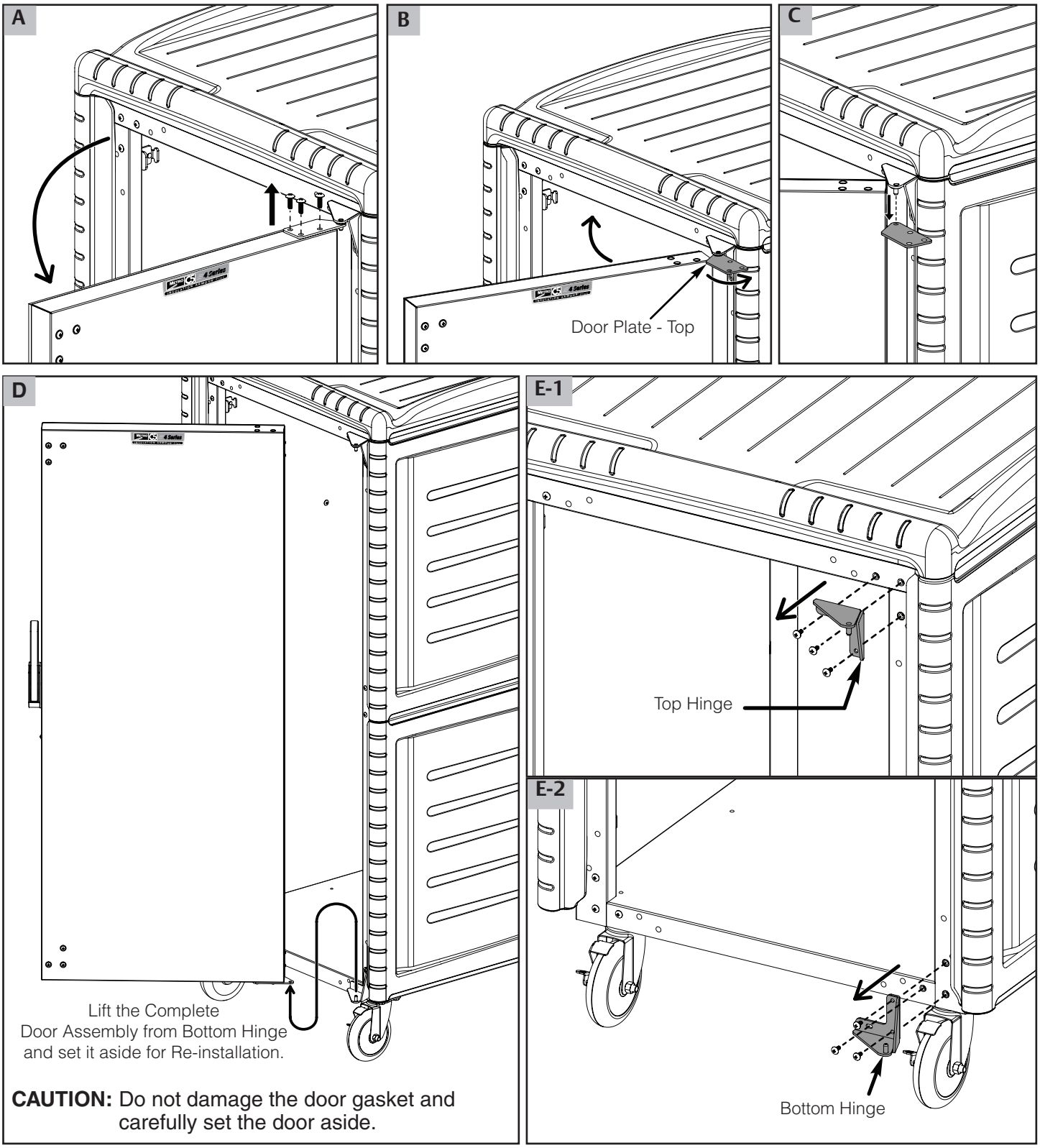

CAUTION: Do not damage the door gasket and carefully set the door aside.

E-3

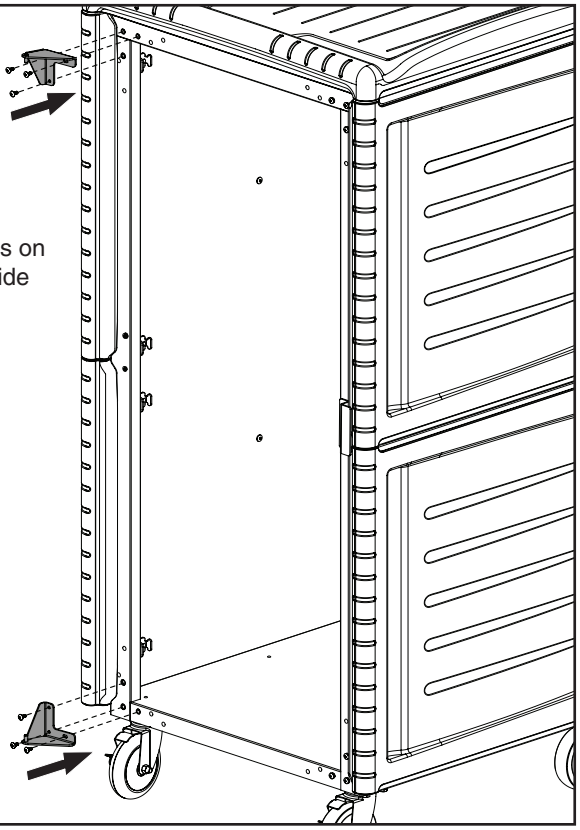

NOTE:
Install hinges on opposite side

F-1

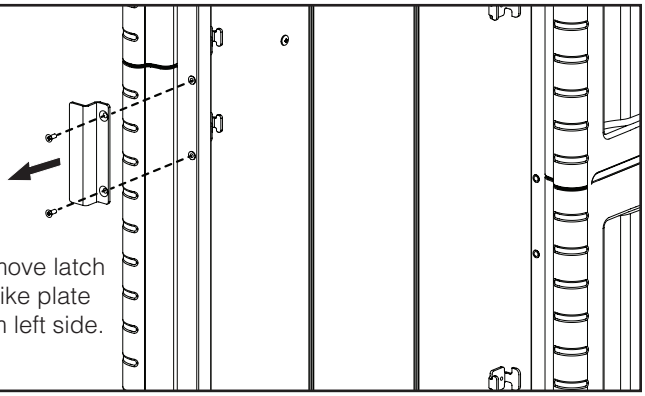

Remove latch strike plate from left side.

F-2

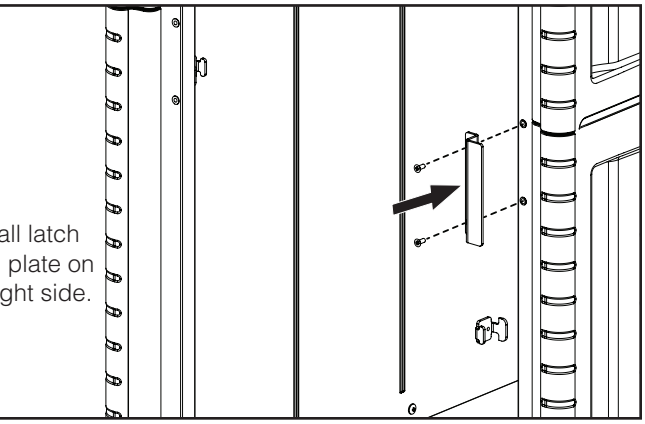

Install latch strike plate on the right side.

G

Cabinet with Door Handle on Left Side and Hinged on Right Side

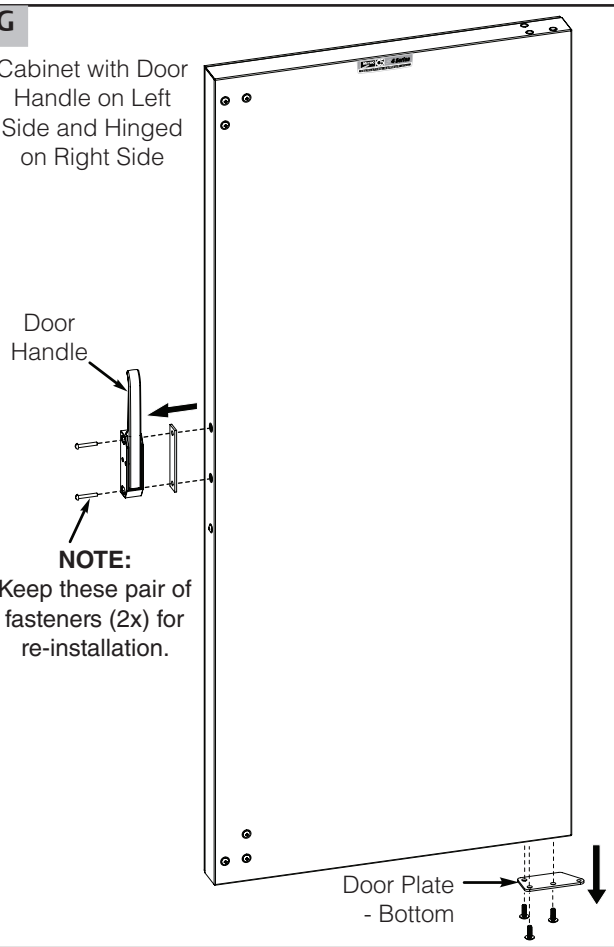

NOTE:
Keep these pair of fasteners (2x) for re-installation.

H

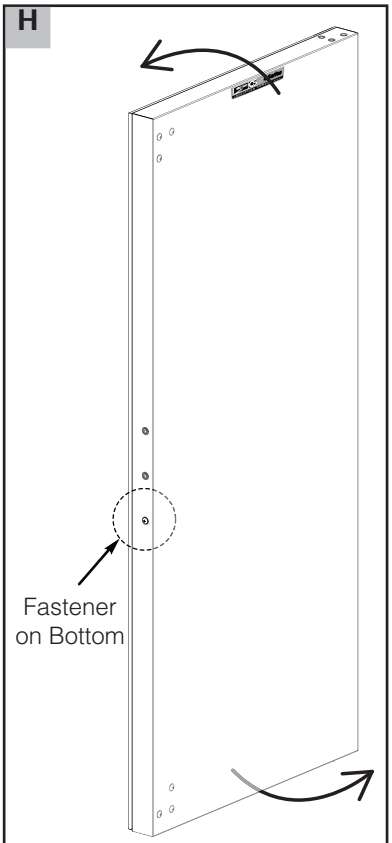

Rotate the door 180° about vertical axis and note the position of fasteners.

I

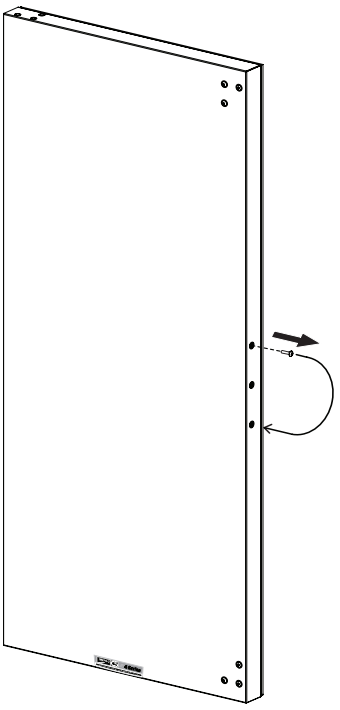

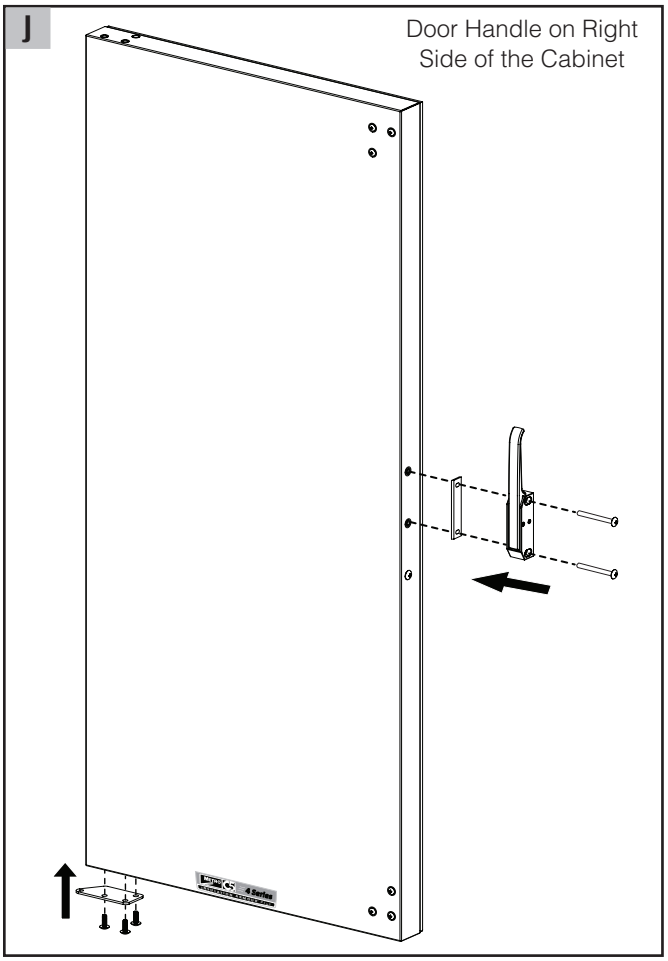

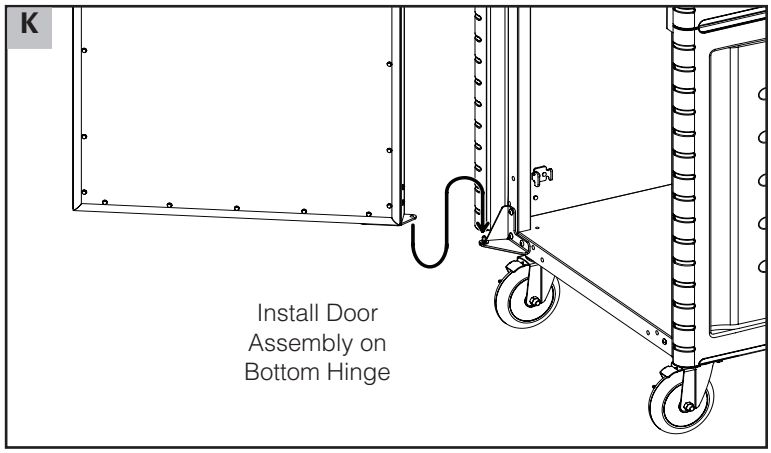

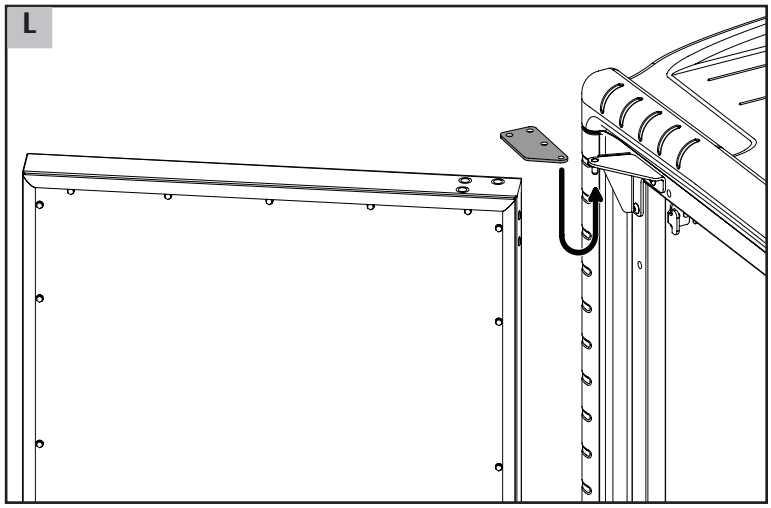

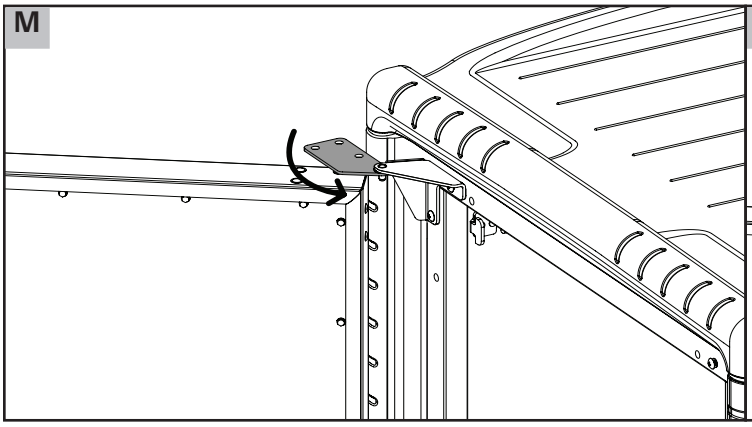

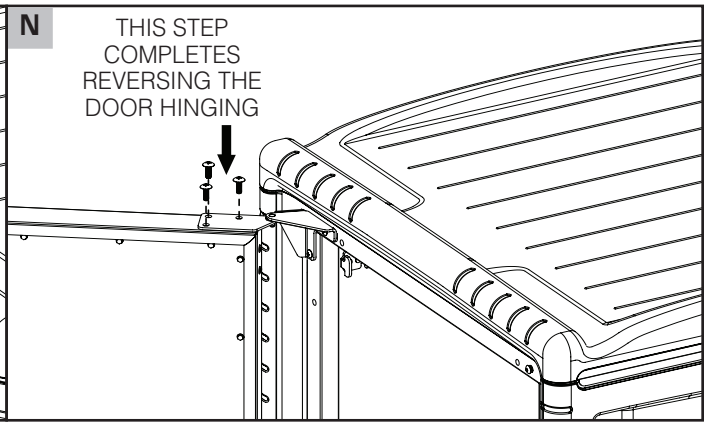

NOTE: Order replacement door label with part #RPC05-1200.

CARE AND MAINTENANCE

NOTICE ***Before proceeding with any maintenance activity strictly follow "Safety Information" on page 2 of this manual.***

Cleaning The Cabinet

WARNING: Do not wash the cabinet with a water jet or high pressure water.

CAUTION: To clean the cabinet, wipe with a damp cloth and dry with a towel. Use only cleaning agents approved for stainless steel.

CAUTION: Do not use cleaners with chlorides or phosphates as they may cause damage to stainless steel.

1. Use cleaners in proper concentrations. Follow the manufacturer's directions for the cleaning product used. The floor of the cabinet may be hosed out with low pressure water. After using any cleaning products, thoroughly rinse all surfaces to remove residue.
2. Use a damp cloth or sponge. Mild soap suitable for stainless steel is acceptable. Dry with a clean towel. Wipe up spills as soon as possible and regularly clean the cabinet to avoid staining and difficult to clean conditions.

NOTICE ***Regularly inspect the casters. Tighten loose fasteners and replace worn or damaged parts with new InterMetro approved parts. Replace worn or damaged casters immediately.***

Armour Panel Cleaning

Use soft cloth, mild soap water solution to clean lightly-soiled surfaces. Then wipe dry with a clean, soft cloth. For heavily-soiled areas, use a soft brush and solvent or emulsion-based cleaner. Always ensure the cleaner is recommended for use on plastics and follow any special instructions from the manufacturer.

C5 4 SERIES TRANSPORT CABINET REPLACEMENT PARTS

Item#	RP Part No.	Description
1	RPC06-1130A	Full Height Door Gasket
	RPC06-1130B	5/6 Height Door Gasket
	RPC06-1130C	1/2 Height and Dutch Door Gasket
2	RPC54-9SFS-DOOR	Solid Full Height Door Assembly
	RPC54-8SFS-DOOR	Solid 5/6 Height Door Assembly
	RPC54-9SDS-BDOOR	Solid 1/2 Height Door Assembly
3	RPC14-118A	Door Latch Flush Handle
4	RPC54-BOTHINGEASY	Bottom Hinge Assembly
5	RPC54-TOPHINGEASY	Top Hinge Assembly
6	B5DN	5" Swivel Caster
	B5DNB	5" Swivel, Brake Caster
	RPQC02-247	6" Swivel Caster
	RPQC02-248	6" Swivel, Brake Caster
6A	B5DNR	5" Rigid Caster
7	RPC54-8-REDPNLF RPC54-9-REDPNLF	Armour Panel with Screws (For Panel Identification See Chart)
8	RPC54N-REDTOPF	Armour Top Panel

Item#	RP Part No.	Description
9	RPC53-HGRKIT	Replacement Rack Hanger Kit
10	RPC54-9-URACK	Full Height Universal Slide Assembly - 2 pair
	RPC54-8-URACK	5/6 Height Universal Slide Assembly - 1 pair
	RPC54-5-URACK	1/2 Height Universal Slide Assembly - 1 pair
11	RPC54-9-LRACK	Full Height Lip Load Slide Assembly - 2 pair
	RPC54-8-LRACK	5/6 Height Lip Load Slide Assembly - 1 pair
	RPC54-5-LRACK	1/2 Height Lip Load Slide Assembly - 1 pair
12	C5-USLIDEPR-C	Chrome Wire Slide, 1 Pair
	C5-USLIDEPR-S	Stainless Steel Wire Slide, 1 Pair
13	RPC54-9-UNIVUP	Individual Full Height Universal Upright
	RPC54-8-UNIVUP	Individual 5/6 Height Universal Upright
	RPC54-5-UNIVUP	1/2 Height Universal Upright
14	RPC54-TRVL	Travel Latch
15	C5-SHELF-S	Wire Shelf (Used with Universal Uprights)
16	RPC05-1200	Door Label

ARMOUR SIDE PANEL IDENTIFICATION		
Height	**Top Panel**	**Bottom Panel**
Full Height	RPC54-9-REDPNLF	RPC54-9-REDPNLF
5/6 Height	RPC54-8-REDPNLF	RPC54-9-REDPNLF
1/2 Height	---	RPC54-9-REDPNLF

C5 4 Series Transport Cabinet Replacement Parts Diagram

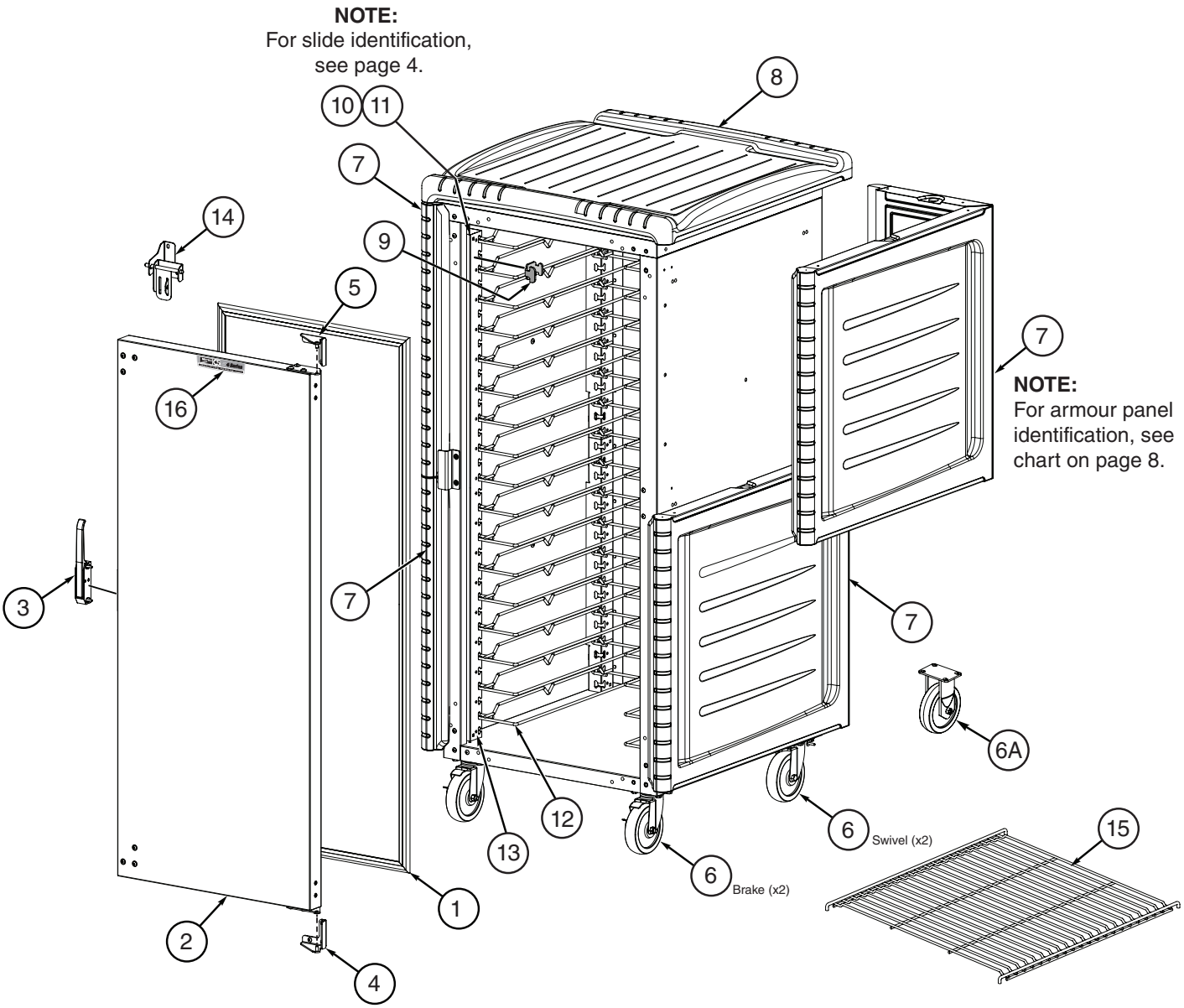

Warranty

WARRANTY, EXCLUSION OF WARRANTIES AND LIMITATION OF LIABILITY. InterMetro Industries Corporation (hereinafter referred to as "Seller") warrants to the original purchaser that all products in its catalog, or custom products, delivered hereunder will be free from defects in workmanship and material. THE FOREGOING WARRANTY IS EXCLUSIVE AND IN LIEU OF ALL OTHER WARRANTIES, EXPRESS, IMPLIED OR STATUTORY, INCLUDING ANY WARRANTY OF MERCHANTABILITY OR FITNESS FOR A PARTICULAR PURPOSE. This Warranty shall be for a period of one (1) year from the date of shipment from Seller's warehouse or factory. If any product delivered hereunder does not meet the Warranty specified above, providing the product has not been altered in any way by anyone other than Seller's factory-authorized representative, and assuming normal and proper use and maintenance, Seller will, at its option, repair or replace any part or material it determines, upon inspection, to be defective; provided however, that a charge for labor will be made except during a period of one (1) year from the date of original shipment from Seller's warehouse or factory. No product, or part thereof, is to be returned to Seller without prior written approval from Seller's factory. All exchanges and replacement shipments will be F.O.B. Seller's factory. Warranties for equipment or articles not manufactured by the Seller are solely the warranties of the manufacturers thereof and they are hereby assigned to the purchaser without recourse to the Seller.

SELLER'S LIABILITY FOR ANY CLAIM OF ANY KIND, WHETHER BASED ON CONTRACT, NEGLIGENCE OR STRICT LIABILITY IN TORT, AND BY WHOMEVER MADE, FOR ANY DIRECT, INDIRECT, INCIDENTAL OR CONSEQUENTIAL LOSS, DAMAGE OR INJURY, RESULTING TO THE PURCHASER OR ANY THIRD PARTIES, arising out of, connected with or resulting from this Agreement, or from the performance or breach thereof, or from the manufacture, sale, delivery, resale, installation, inspection, repair or use of any product covered by or furnished under this Agreement, WHETHER OR NOT CAUSED BY SELLER'S NEGLIGENCE, SHALL IN ALL EVENTS BE EXCLUSIVELY LIMITED TO THE COST OF CORRECTING DEFECTIVE, DAMAGED OR NON-CONFORMING PARTS OR MATERIAL AS HEREIN PROVIDED, and upon the expiration of one (1) year, all such liability shall terminate.

SELLER DOES NOT AUTHORIZE any person to assume for it any obligations or liabilities greater than or different than those set forth in this Warranty. The terms under which any of Seller's products may be resold must be limited in accordance with this Warranty.

THIS AGREEMENT, and all the rights and obligations arising hereunder, shall be construed in accordance with, and be governed by, the law of the Commonwealth of Pennsylvania, U.S.A.

TO INSURE WARRANTY implementation, return the completed registration card within 15 days of cabinets' receipt to: InterMetro Industries Corp., Wilkes-Barre, PA 18705

METRO®

InterMetro Industries Corporation
Wilkes-Barre, PA 18705

02/2022

For online warranty registration, please go to www.metro.com/service-support/thermal-cabinets to register electronically

* Save this document for future application, load rating and/or safety reference.

© 2022 InterMetro Industries Corporation, Wilkes-Barre, PA 18705
L01-607 REV D 02/22

METRO®

We put space to work.®

an Ali Group Company

The Spirit of Excellence