{13.94N}

Metro® C5 4 Series Insulation Armour™ *Plus* Transport Cabinets

Metro C5 4 Series Insulation Armour™ *Plus* Transport Cabinets are the perfect mix of value & performance.

- **Insulation Armour™ *Plus:*** Patented insulation technology replaces traditional sheet metal exterior with foamed-in-place polyurethane polymer panels, providing improved temperature retention while transporting hot or cold food. Armour panels have molded in handles and act as a full body bumper for handling and protection during transport. Recessed top panel with ledges to help carry smaller loose objects.
- **Stainless Steel Construction:** High quality, Type 304 stainless steel for easy cleaning and long-term durability.
- **Greater Pan Capacity:** Improved space and labor efficiency with up to 60% more 12" x 20" / GN pan capacity per square foot (compared to other popular polymer insulated transport carts).
- **Flexible Pan Slides:**
  - Universal slides provide maximum flexibility to hold different pan styles in the same cabinet. Adjustable on 1½" increments, holds 12" x 20" pans, GN 1/1 and 2/1 pans, and/or 18" x 26" sheet pans.
  - Lip load slides exclusively hold 18" x 26" sheet pans on 1½" fixed increments.
- **Easy Access Door Latch:** High strength magnetic latch with lever-action release facilitates opening and closing of door when loading and unloading pans in high volume kitchens.
- **Sizes:** Full height, 5/6 height, and 1/2 height sizes available for varying operational needs.
- **Reliability:** Reliability and durability are designed from the ground up. High-quality components provide a long life of worry free use.



Full Height



5/6 Height



1/2 Height

All Metro Catalog Sheets are available on our website: **metro.com**

Information and specifications are subject to change without notice.
Please confirm at time of order.
Copyright © 2024 InterMetro Industries Corp.

metro.com
North Washington Street, Wilkes-Barre, PA 18705
Product Information. U.S. and Canada: 1.800.992.1776
Outside U.S. and Canada: metro.com/contactus

{13.94N}

Metro® C5 4 Series Insulation Armour™ *Plus* Transport Cabinets

Specifications

All cabinets are 30" (762mm) wide and 33" (838mm) deep

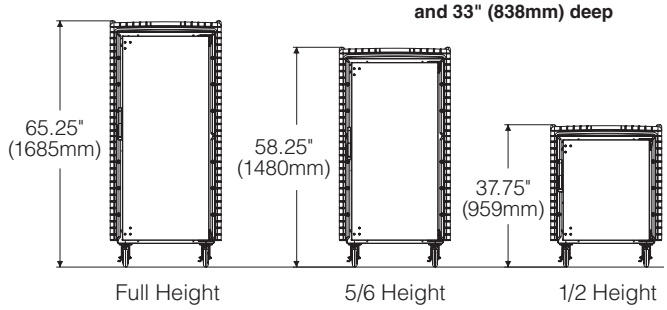

- **Cabinet Material:** Type 304 stainless steel, 20-gauge cabinet body with High Density Polyethylene (HDPE) exterior
- **Insulation:** Insulation Armour™ *Plus* HDPE polymer panels with 2" thick CFC free foamed-in-place polyurethane insulation on sides, back, and top. Floor insulated with 1½" thick high density fiberglass insulation.
- **Casters:** Plate mounted, 2 swivel and 2 swivel with brake. 5" (127mm) diameter donut neoprene wheels.
- **Doors:** Type 304 stainless steel, 20-gauge insulated, welded doors. Field reversible, 180° swing. Fully insulated with 2" thick high density fiberglass insulation.
- **Door Latch:** Chrome plated, high-strength, flush mounted magnetic latch with lever-action release.
- **Door Gaskets:** High temperature, door mounted, Santoprene gasket.
- **Door Hinges:** Type 304 stainless steel, 11-gauge heavy-duty pivot hinge with welded pin.
- **Universal Wire Slides:** ¼" (6.4mm) diameter nickel-chrome electroplated wire, adjustable on 1½" (38mm) increments. Type 304 stainless steel uprights. For 12 x 20, GN, and 18x26 pans.
- **Lip Load Slides:** 1½" x ½" x 0.063" (38x13x1.6mm) extruded aluminum channel slides, fixed on 1½" spacing, riveted to .063" aluminum uprights. For 18 x 26 pans.
- **Clearance Requirements:** 18" (46cm) away from any cooking equipment. AVOID contact with any surfaces that exceed 200°F (93°C).
- **Slide Capacities:**

Model Number Description

Cabinet Height
9 = Full Height
8 = 5/6 Height
5 = 1/2 Height

C5 4 9N - S U

Slide Type
U = Universal Wire
L = Lip Load Aluminum

Models with Accessories or Options

C5 4 9N - S U A ← An "A" suffix indicates that accessories need to be factory assembled to the cabinet. Order accessories separately.

Options/Accessories

- Travel Latch/Hasp (C54-TRVL)
- Factory Left Hand Hinging (DD3768)
- 6" Polyurethane Casters (C5-6CASTER)
- Rear Rigid Casters (C5-RDGCSTR)
- Small Item Shelf (C5-SHELF-S)
- Universal Slide Pair, Chrome (C5-USLIDEPR-C)
- Universal Slide Pair, Stainless (C5-USLIDEPR-S)
- Stainless Steel Universal Slide Upgrades
  - Full Height (C5-USLIDE-9S)
  - 5/6 Height (C5-USLIDE-7S)
  - 1/2 Height (C5-USLIDE-5S)

	Universal Wire Slide Pan Capacity												Lip Load Slide Pan Capacity
	Slide Pairs		Sheet Pans	Steam Pans			Gastronorm						Sheet Pans
							65mm Depth		100mm Depth		150mm Depth		
Cabinet Size	Provided	Max.	18"x26"	12"x20"x2.5"	12"x20"x4"	12"x20"x6"	2/1	1/1	2/1	1/1	2/1	1/1	18"x26"
Full Height	17	34*	17**	34	22	14	17	34	11	22	7	14	34***
5/6 Height	14	29*	14**	28	20	12	14	28	10	20	6	12	29***
1/2 Height	8	15*	8**	16	10	6	8	16	5	10	3	6	16***

*Maximum number of slide pairs @ 1.5" spacing. Additional slide pairs ordered separately.
**Standard capacity @ 3" spacing, increased capacity requires additional slide pairs.
***Standard capacity @ 1.5" spacing.